Parts:

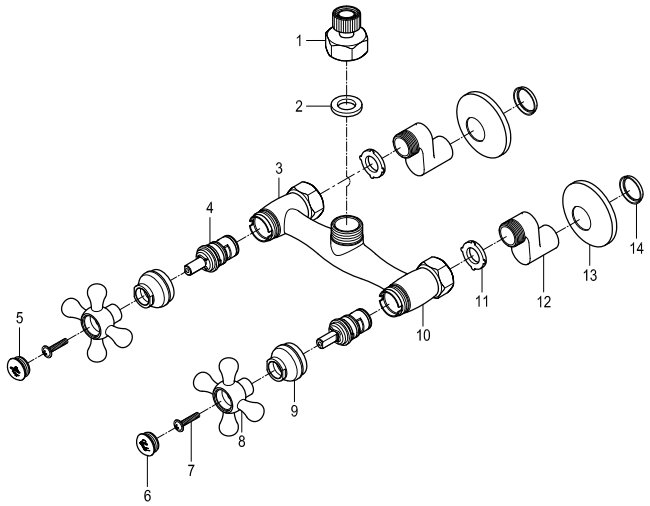

Replacement Parts:

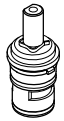

Hot Cartridge: KC1000H

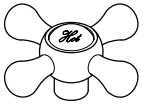

Hot Handle: KSH266H

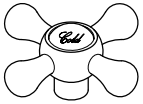

Cold Handle: KSH266C

KINGSTON
KITCHEN & BATH

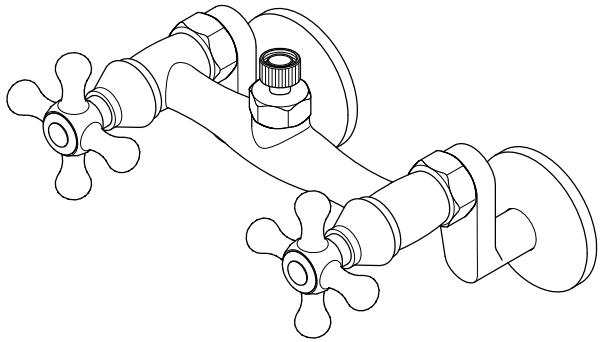

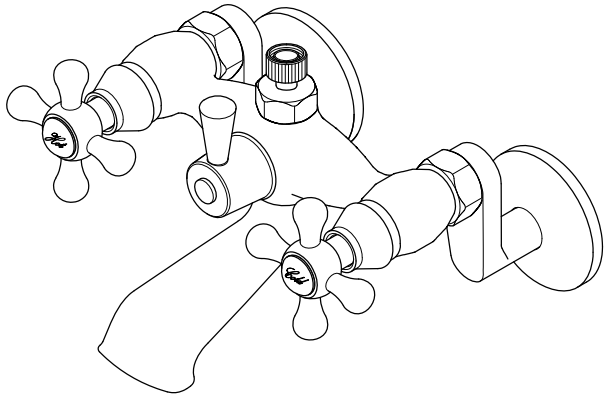

CARE AND MAINTENANCE OF YOUR FAUCET

Your Kingston Brass faucet has been finished to the most strict standards; however, due to the high content of minerals in the water, your finish may appear dull and tarnished after time. These are some do's and don'ts to maintain the luster on your faucet for many years to come.

DO
1. Use a silicon based caulking when installing.
2. Clean your faucet with only a mild soap and water solution.
3. Dry your faucet after using it.
4. Give it a coat of Carnauba Wax periodically.

DON'T
1. Use plumbers putty when installing the faucet.
2. Use any abrasive cleaning agents.

It may seem like a very simple and short list but it is that simple to maintain your faucet, looking shiny and new.

If your faucet is already looking somewhat dull and tarnished, before replacing it, try cleaning it with a 50/50 solution of vinegar and water, you may need to soak some rags and wrap around those stubborn areas, leave overnight and rinse completely in the morning, apply Carnauba wax once you have removed the mineral deposits.

www.kingstonbrass.com
TOLL-FREE CUSTOMER SERVICE: 1-877-2-KBRASS
TECHNICAL SUPPORT E-mail: service@kingstonbrass.com
12775 Reservoir Street, Chino, CA 91710

NOTICE

Failure to follow all directions may cause leaks which may result in water damage

⚠CAUTION

Failure to follow all installation directions may cause product to detach from the wall and cause serious injury

KINGSTON
KITCHEN & BATH

INSTALLATION INSTRUCTIONS
Wall Mount Exposed Shower

Need Tools:

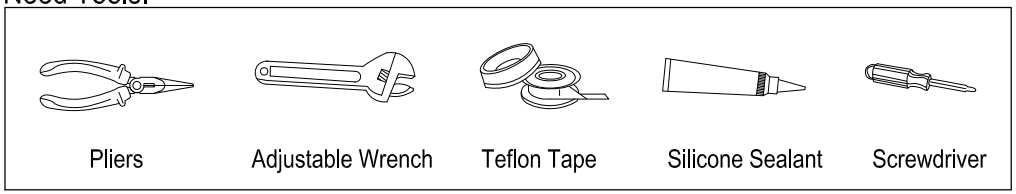

BEFORE BEGINNING INSTALLATION:

1. Flush plumbing lines to clear any debris.
2. Shut off both supply lines after flushing.

1

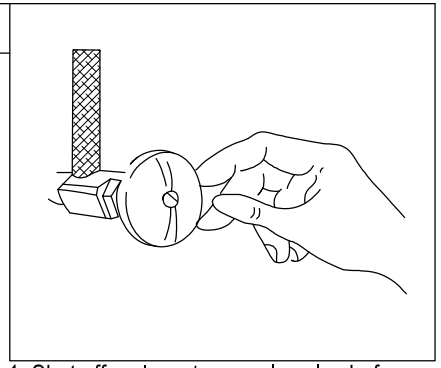

1. Shut off main water supply valve before installation.

2

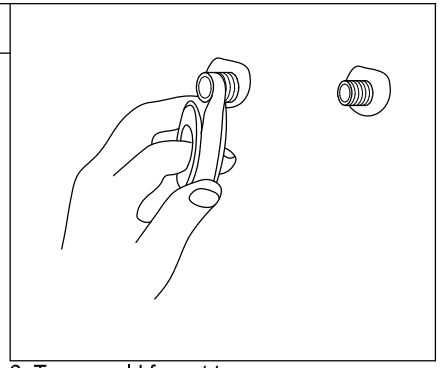

2. Turn on old faucet to remove any excess water in the supply lines. Apply Teflon tape onto both threads of supply elbows.

3

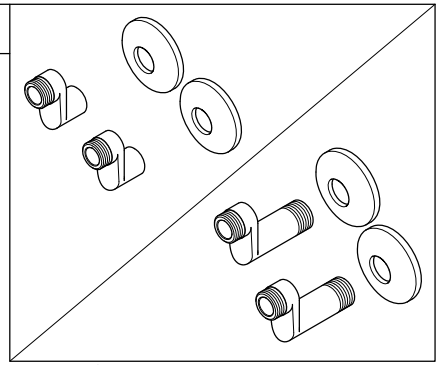

3. Place flange to elbow and connect the elbow to the supply lines.

4

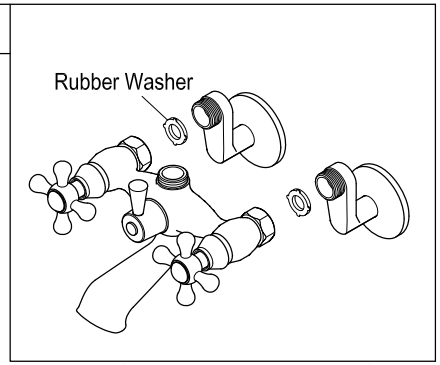

4. Apply Teflon tape on the threads of the elbow. Install the faucet.

5

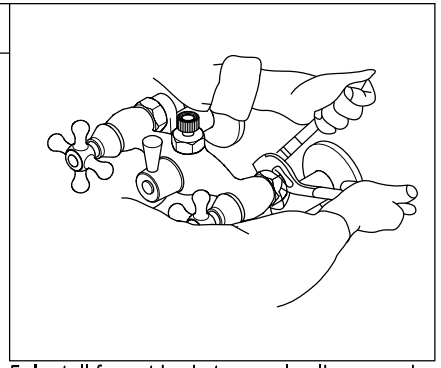

5. Install faucet body to supply elbows and tighten the elbow with an adjustable wrench.

6

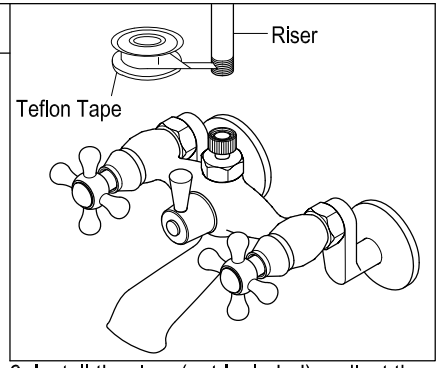

6. Install the riser (not Included) , adjust the distance on the riser's wall bracket to insure that it is plumb as it aligns with the faucet's top outlet, after applying Teflon tape, thread the faucets outlet nut onto the shower riser and tighten.

7

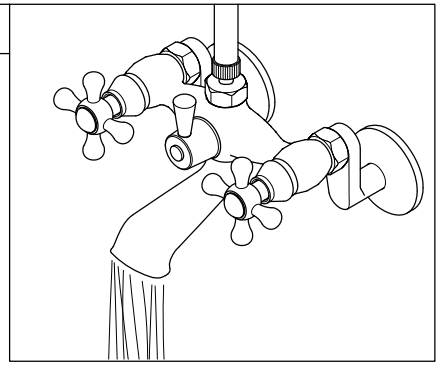

7. Before installing the showerhead, turn both hot and cold valves, let water run for at least 30 seconds through the tub spout, check for leaks, switch the diverter to allow water to be diverted to the showerhead outlet allow the water to run for another 30 seconds as you check for leaks on the risers connection to the faucet, this will also clear debris from the line.

Warning!!!

- DO NOT STEP ON faucet or supply line installation. This fixture is not a stair to access your storage, window or access higher ceiling. This Cast Brass Faucet cannot support your body weight. To step on faucet will crack the fitting and eventual fracture to cause water damage to your property.
- The faucet was tested and meets ASME/ANSI code on its operation, loading and torque pressure. However this faucet is not designed to support weight over 250 pound per square inch of pressure, DO NOT OVERTIGHTEN.
  DO NOT APPLY ELECTRICAL TOOL to fasten faucet installation.
- For Exposed tub supply line installation faucet model, your supply lines have to be installed on corner area, or at area with no walking traffic access to cause accidental tamper or accidental breakage. For installation of exposed supply line at open traffic area is prohibited.
- Removal of this tag prior to installation will void your warranty. Pass the WARNING TAG to the owner after installation.

© 2023-06-T Kingston Brass

KINGSTON
KITCHEN & BATH

INSTALLATION INSTRUCTIONS
Convert to Shower without Spout & Showerhead

BEFORE BEGINNING INSTALLATION:

1. Flush plumbing lines to clear debris in pipe and plumbing lines to avoid existing clogs into waterway & cartridge system of new faucet fixture.
2. Shut off both supply lines after flushing

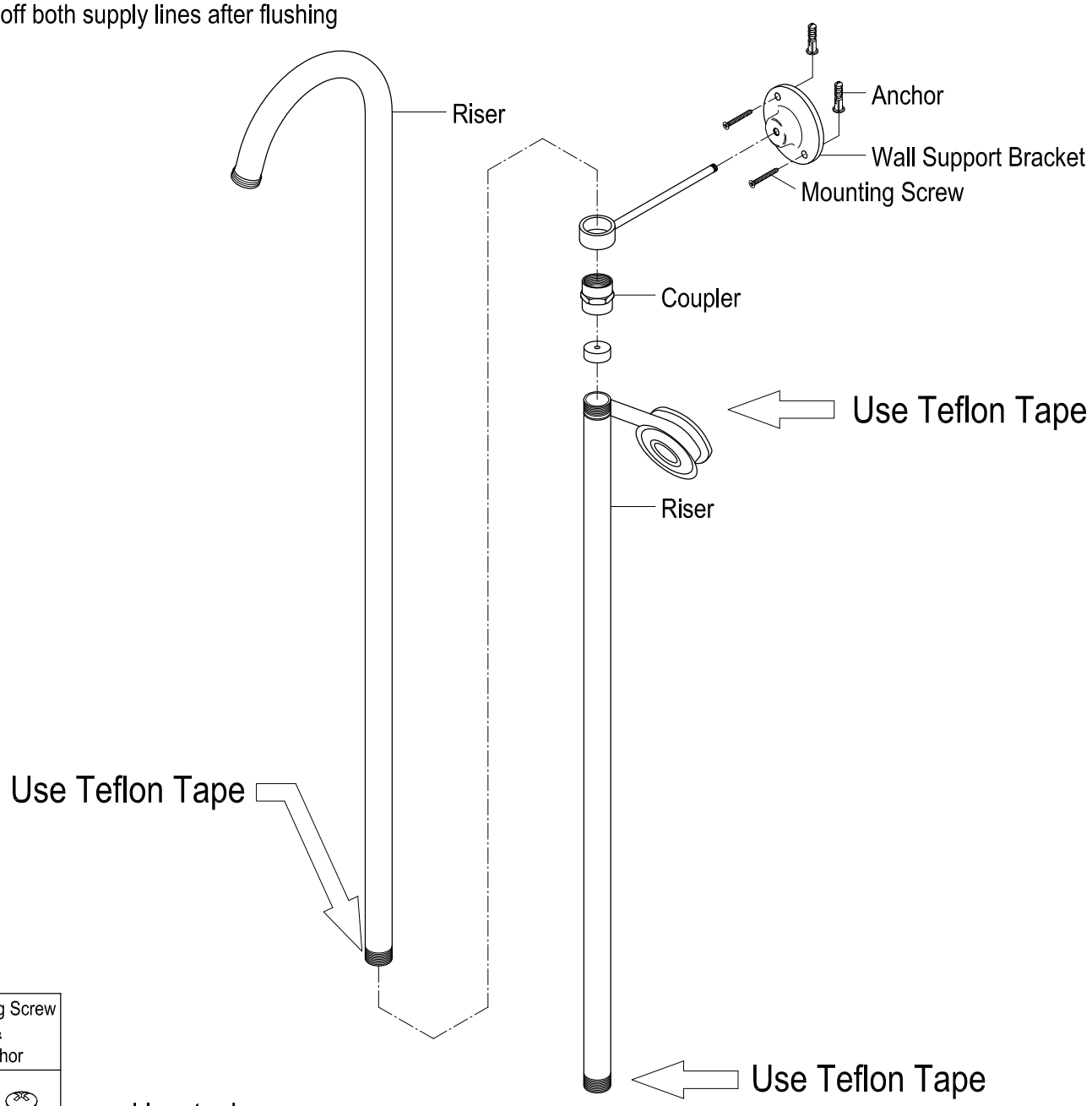

Parts:

Mounting Screw & Anchor
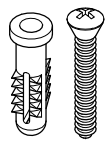
2 Pcs

www.kingstonbrass.com
TOLL-FREE CUSTOMER SERVICE: 1-877-2-KBRASS
TECHNICAL SUPPORT E-mail: service@kingstonbrass.com
12775 Reservoir Street, Chino, CA 91710

NOTICE

Failure to follow all directions may cause leaks which may result in water damage

⚠CAUTION

Failure to follow all installation directions may cause product to detach from the wall and cause serious injury

© 2022-10-E Kingston Brass

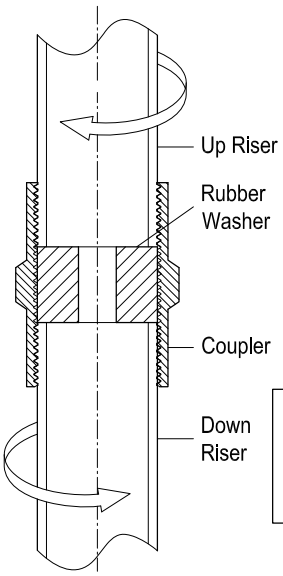

Installation Manual:

STEP 1. Insert the thick rubber washer inside the coupler.

STEP 2. Apply Teflon tape on both thread ends of up and down risers.

STEP 3. Thread both up and down risers onto coupler.

STEP 4. Mark sure the rubber washer is actually compressed between the up and down risers. Also, the coupler should be tightly connected, no loosen allowed.

Warning: If the rubber washer is loosen inside the coupler or not compressed, it will not effectively seal the water and lead to leakage.

© 2023-06-D Kingston Brass

KINGSTON
KITCHEN & BATH

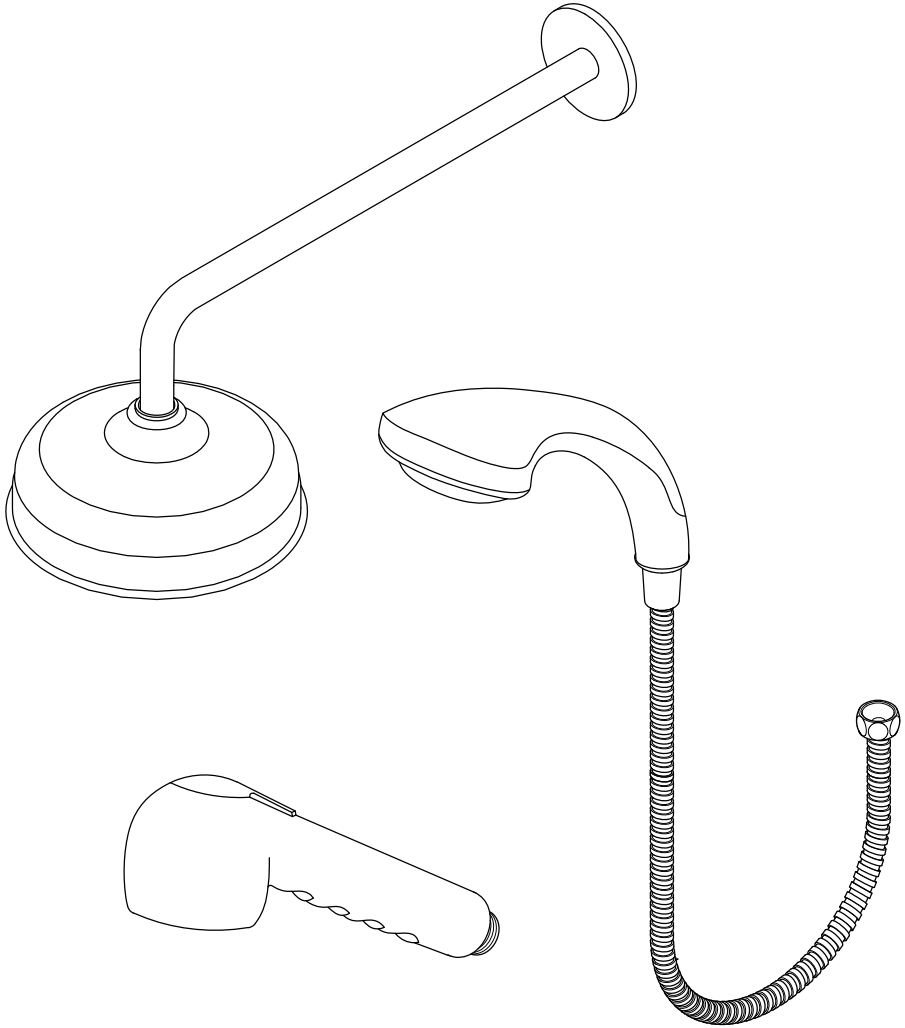

NOTICE

Failure to follow all directions may cause leaks which may result in water damage

www.kingstonbrass.com
TOLL-FREE CUSTOMER SERVICE: 1-877-2-KBRASS
TECHNICAL SUPPORT E-mail: service@kingstonbrass.com
12775 Reservoir Street, Chino, CA 91710

KINGSTON
KITCHEN & BATH

INSTALLATION INSTRUCTIONS
Showerhead Sets, Hand Shower Sets and Pull-Out & Pull-Down Sprayer

Before installation:
Hold the existing shower arm up and down to ensure the plumbing behind the wall is rigid to hold the weight of the new shower unit - about 3-4 lbs when filled with water.

Installation manual for shower arm & showerhead:

1

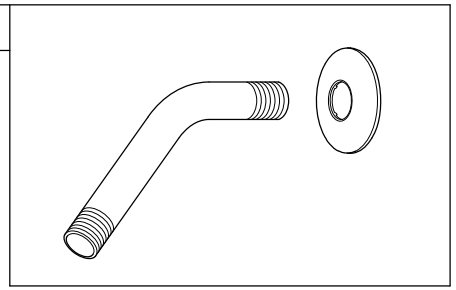

1. Place the flange into the shower rod.

2

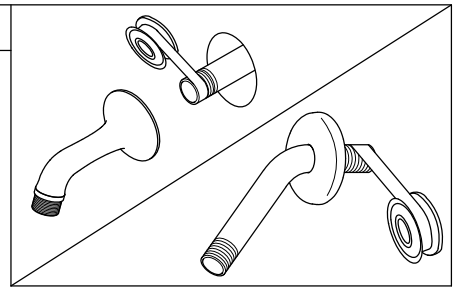

2. Wrap threads on one end of shower rod or the plumbing male nipple with 3 wraps of Teflon tape.

3

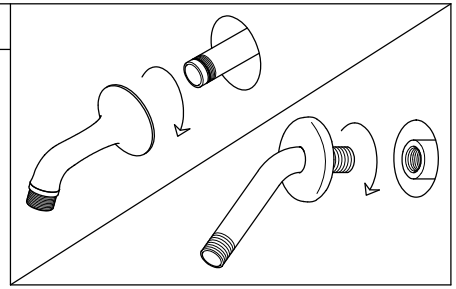

3. Thread the male nipple into female nipple (in wall), tighten with pipe wrench.

4

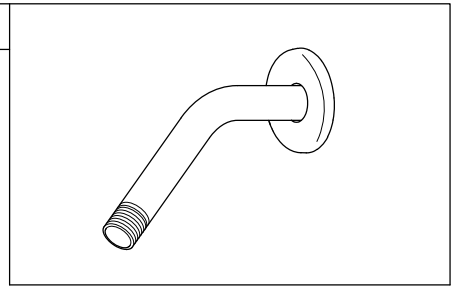

4. Turn the water on and check for leaks, any leaks will require minor tightening or adjustment.

5

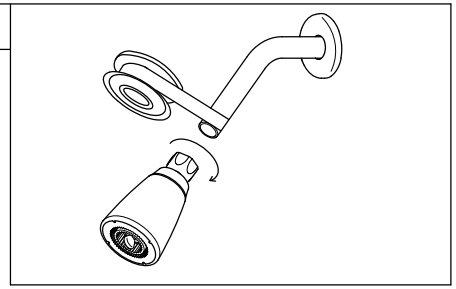

5. Wrap Teflon tape around all the threads on shower rod and hand tighten the showerhead clockwise.

6

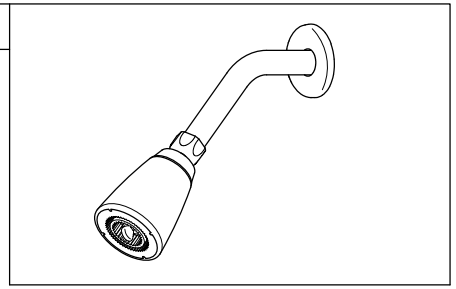

6. Turn the water on and check for leaks, any leaks will require minor tightening or adjustment. If the showerhead leaks at the connection to the thread shower arm, tighten the connection some more by using a wrench.

Need Tools:

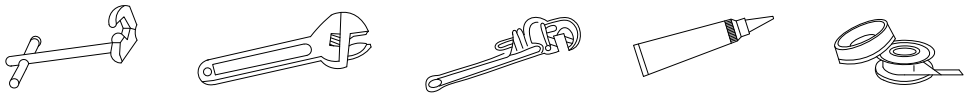

Basin Wrench | Adjustable Wrench | Pipe Wrench | Silicone Sealant | Teflon Tape

Installation manual for hand shower :

1

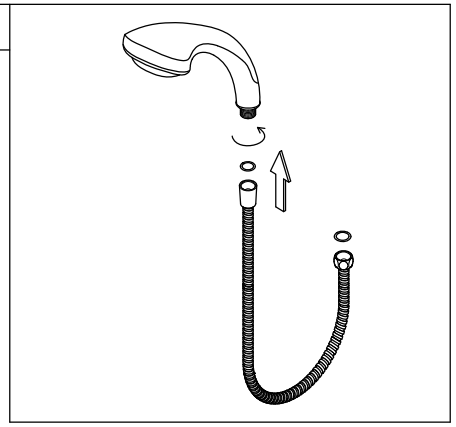

1. Put a washer to the cone shape hose nut and hand tightens the hand shower clockwise.

2

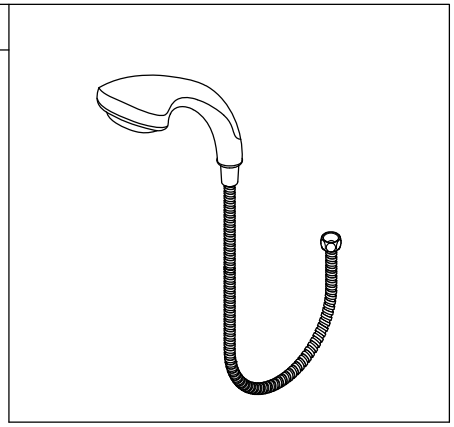

2. Turn on the water and check for leaks, if the hand shower leaks at the connection to the hose, hand tighten the connection some more.

Installation manual for pull-out & pull-down sprayer:

1

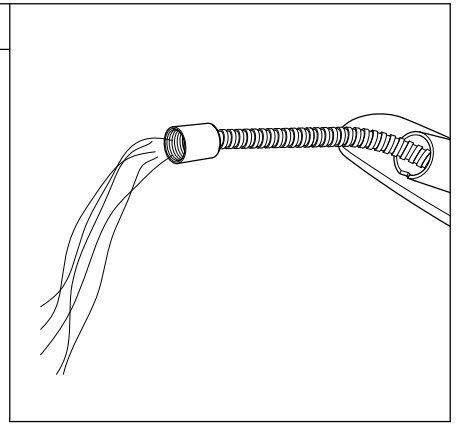

1. Thread hose to spray head and feed from the top into the faucet spout, turn the spout to the right or to the left fully to facilitate the insertion of the hose.

2

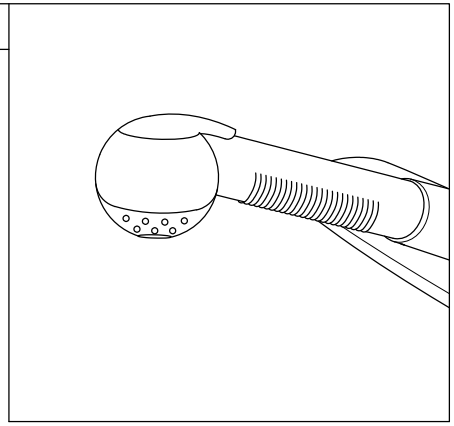

2. After applying Teflon tape thread other end of hose to spray hose outlet, located underneath the faucet. Remove sprayhead and let water run for at least one minute to eject any debris remaining on the line, reinstall sprayhead.

© 2022-10-E Kingston Brass