ABT1030A0,1,2,3,5,6,7,8

59" Hose
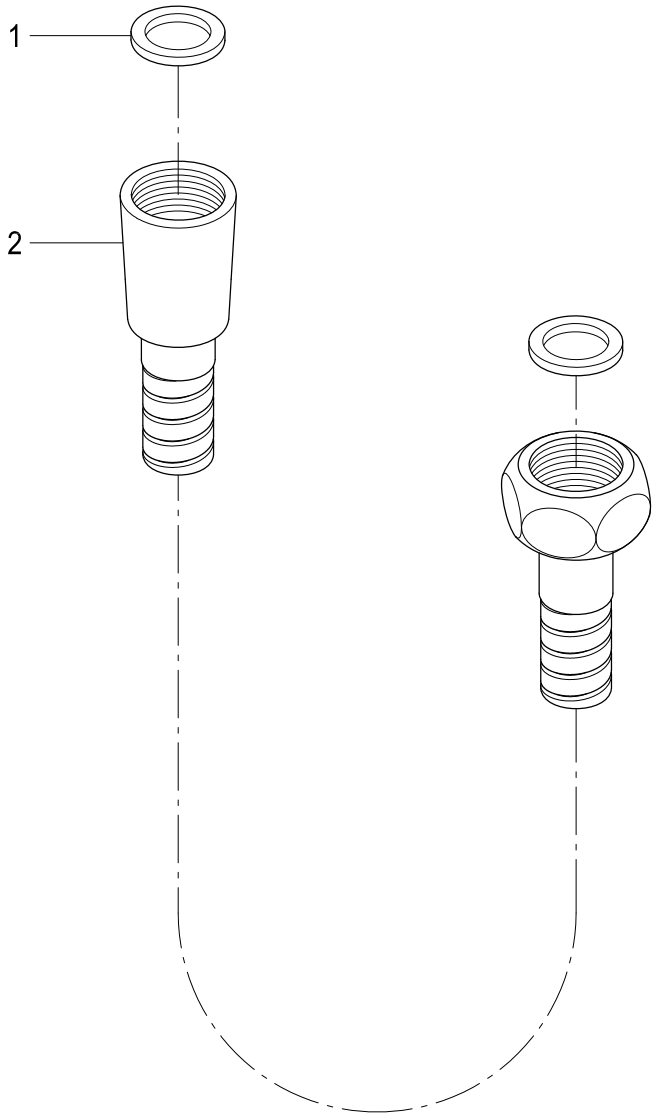
Part #	QTY
1.	2
2.	1