AE558T1,AE557T0,2,5,6,7,8
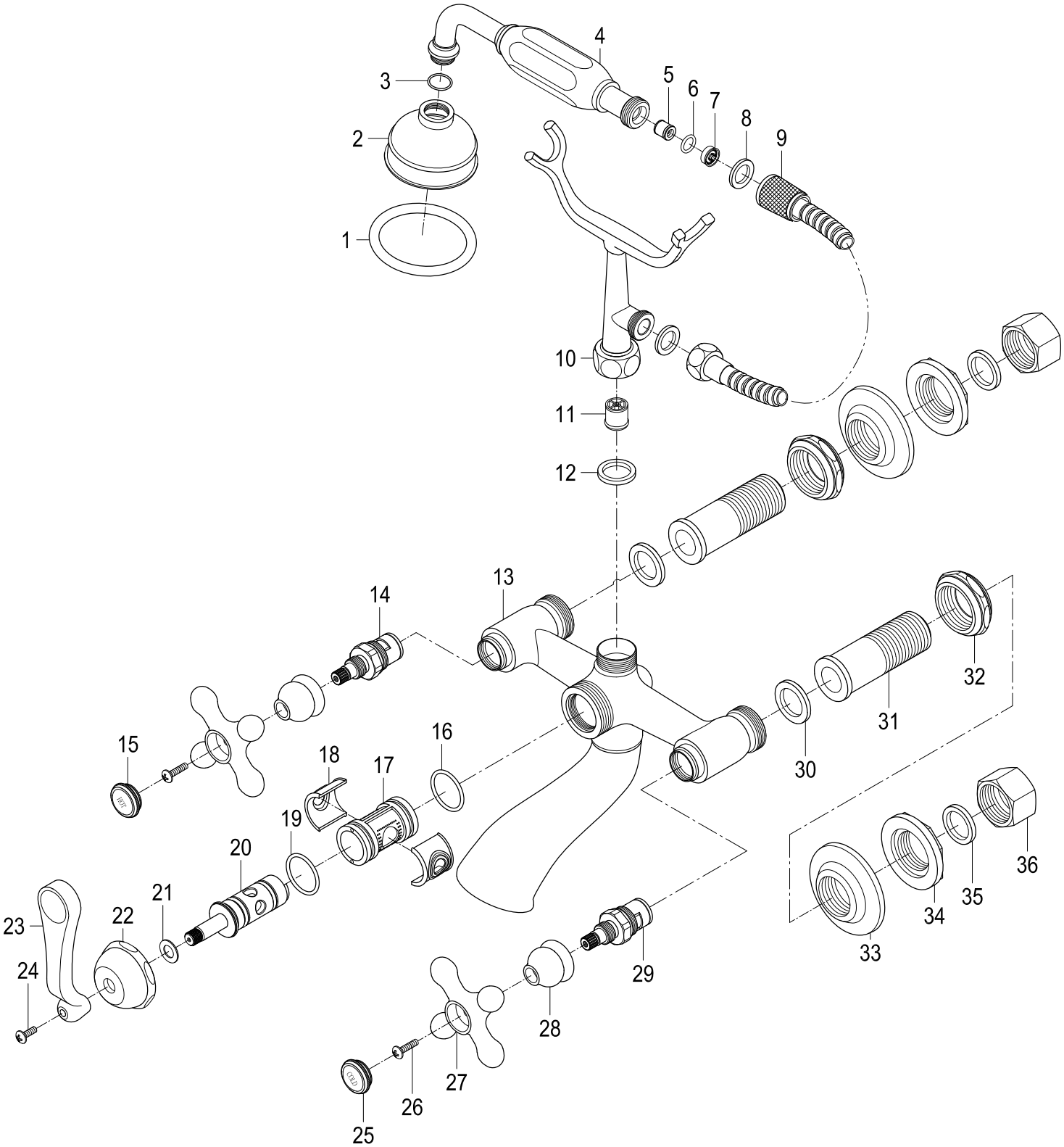
Wall Mount Tub Filler with Hand Shower