BA1752MB,C,PB,AB,ORB,BB,SN

18" Towel Bar
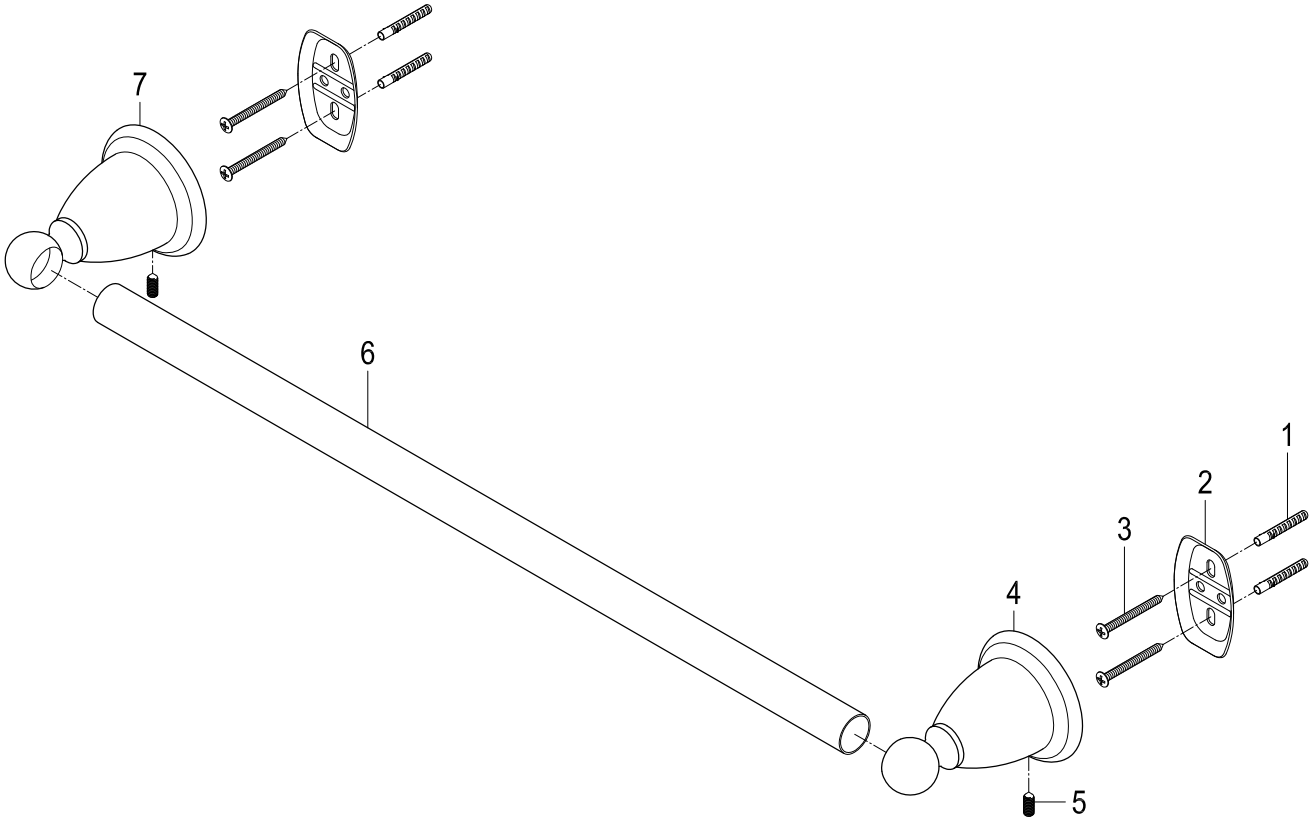
Part #	QTY
1.	4
2.	2
3.	4
4.	1
5.	2
6.	1
7.	1