CC3130,1,2,5,6,7,8

D-Type Shower Rod, 1" O.D., 21 Gauge

Part #	QTY
1.	10
2.	1
3.	7
4.	10
5.	3
6.	3
7.	1
8.	2
9.	3
10.	2
11.	2

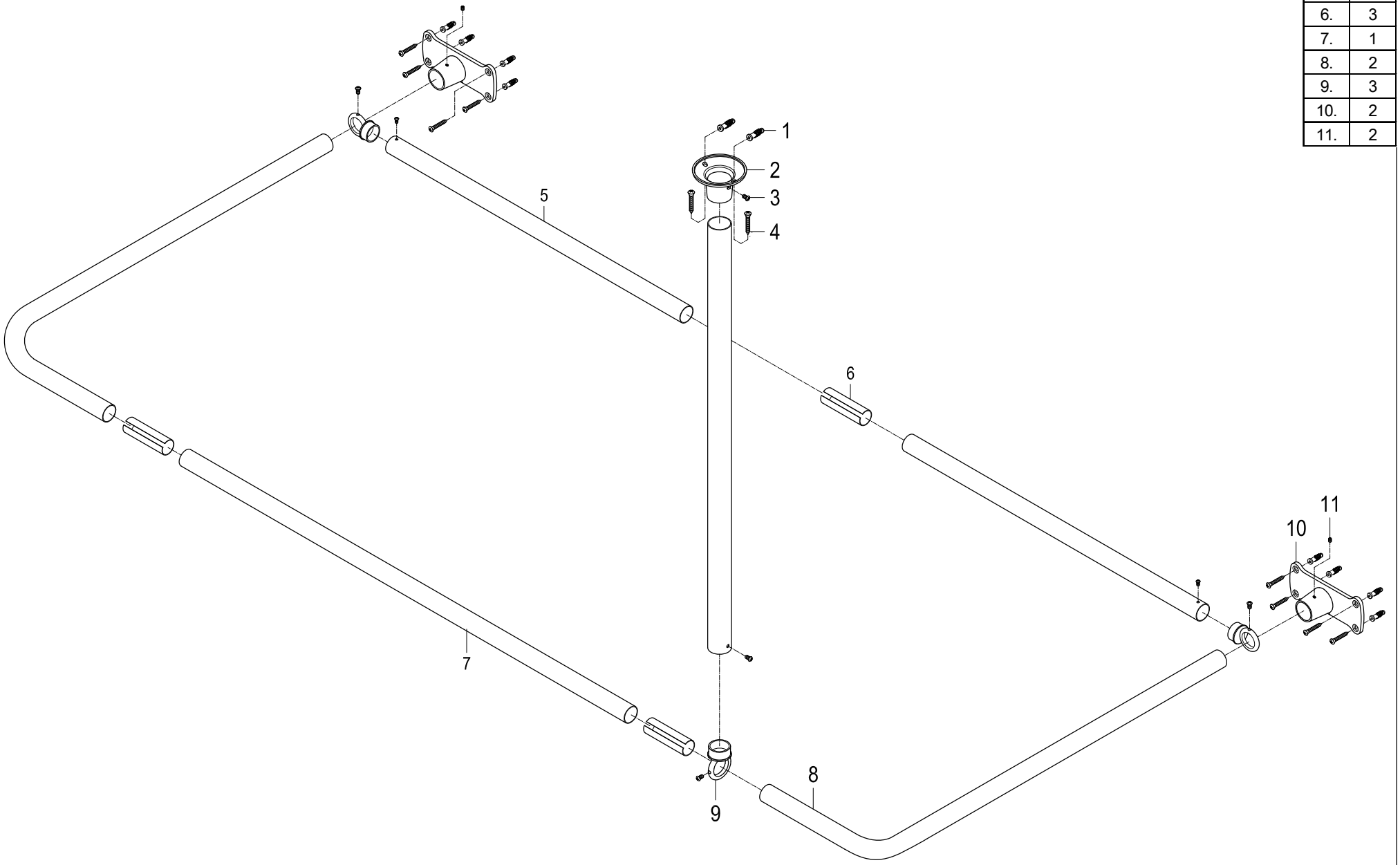

Ref# CC3130,1,2,5,6,7,8 | 2021-02-A