CC44150,1,2,3,5,6,7,8

Quarter Turn Valves, 1/2" FIP x 1/2" or 7/16" Slip Joint
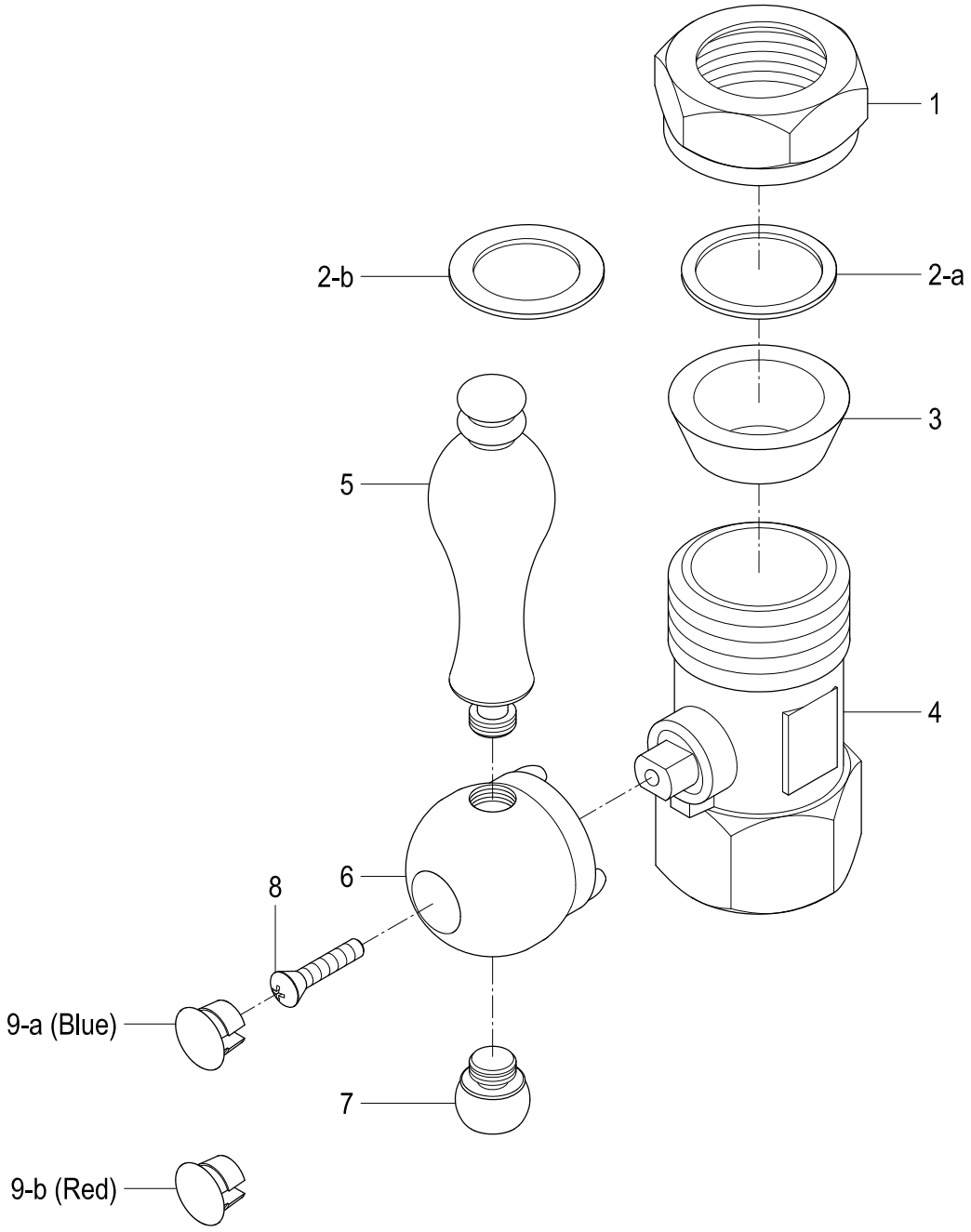
Part #	QTY
1.	1
2-a.	1
2-b.	1
3.	1
4.	1
5.	1
6.	1
7.	1
8.	1
9-a.	1
9-b.	1