CC54301,2,5,8X

Quarter Turn Valves, 5/8" O.D Comp x 1/2" or 7/16" Slip Joint
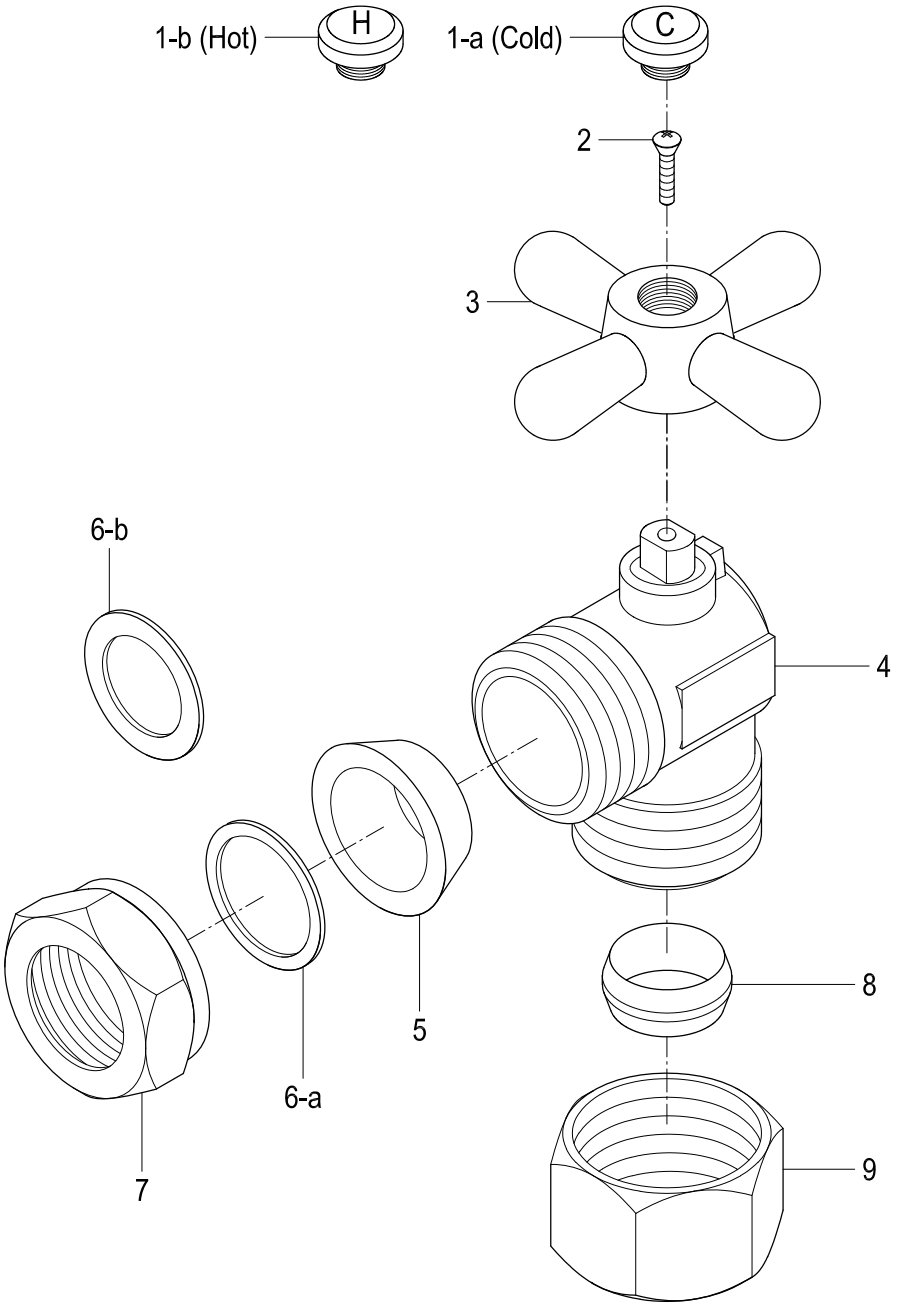
Part #	QTY
1-a.	1
1-b.	1
2.	1
3.	1
4.	1
5.	1
6-a.	1
6-b.	1
7.	1
8.	1
9.	1