CC654T1,CC653T2,5,8
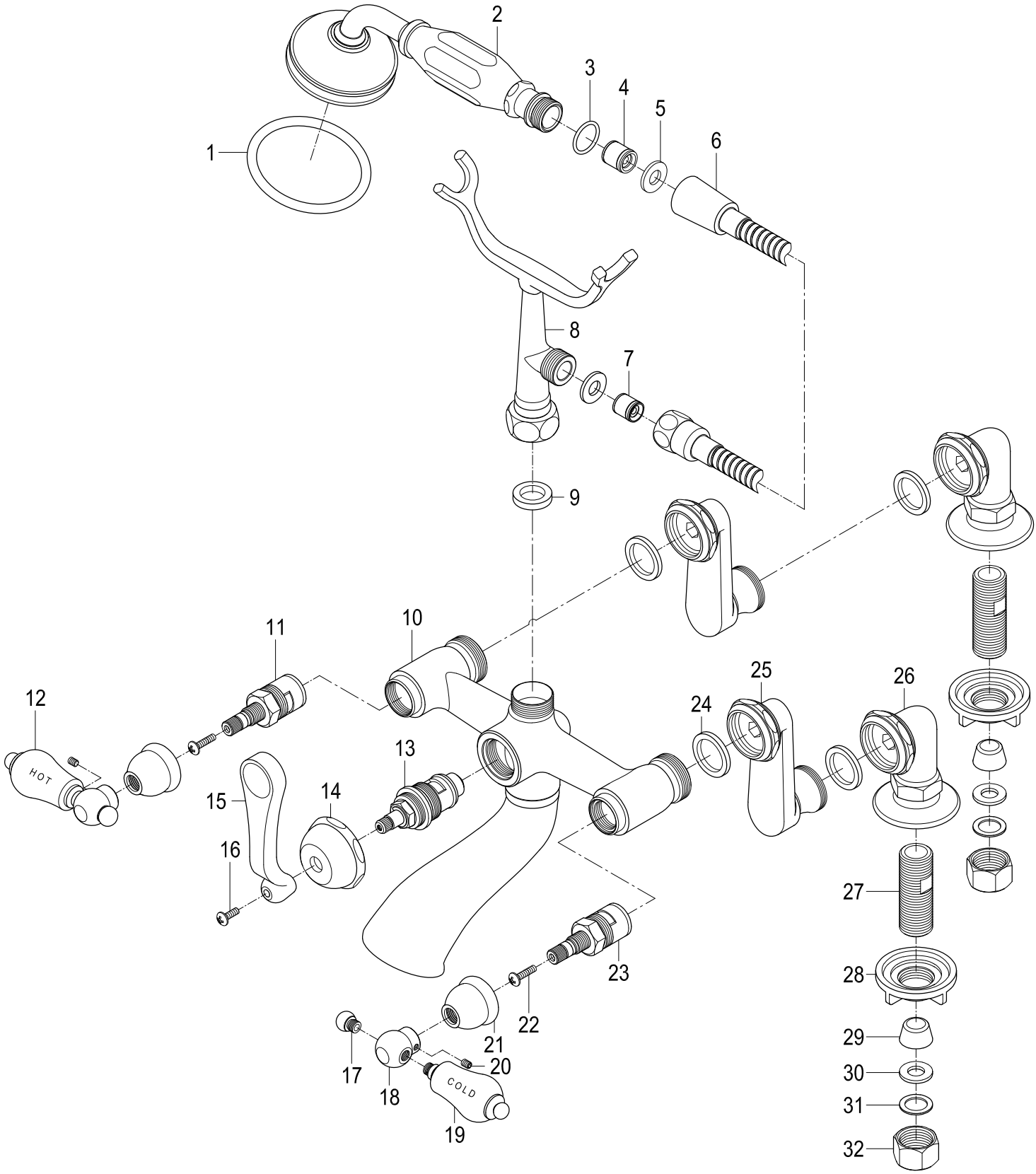
Deck Mount Tub Filler with Hand Shower