CC74T1,CC73T2,5,8
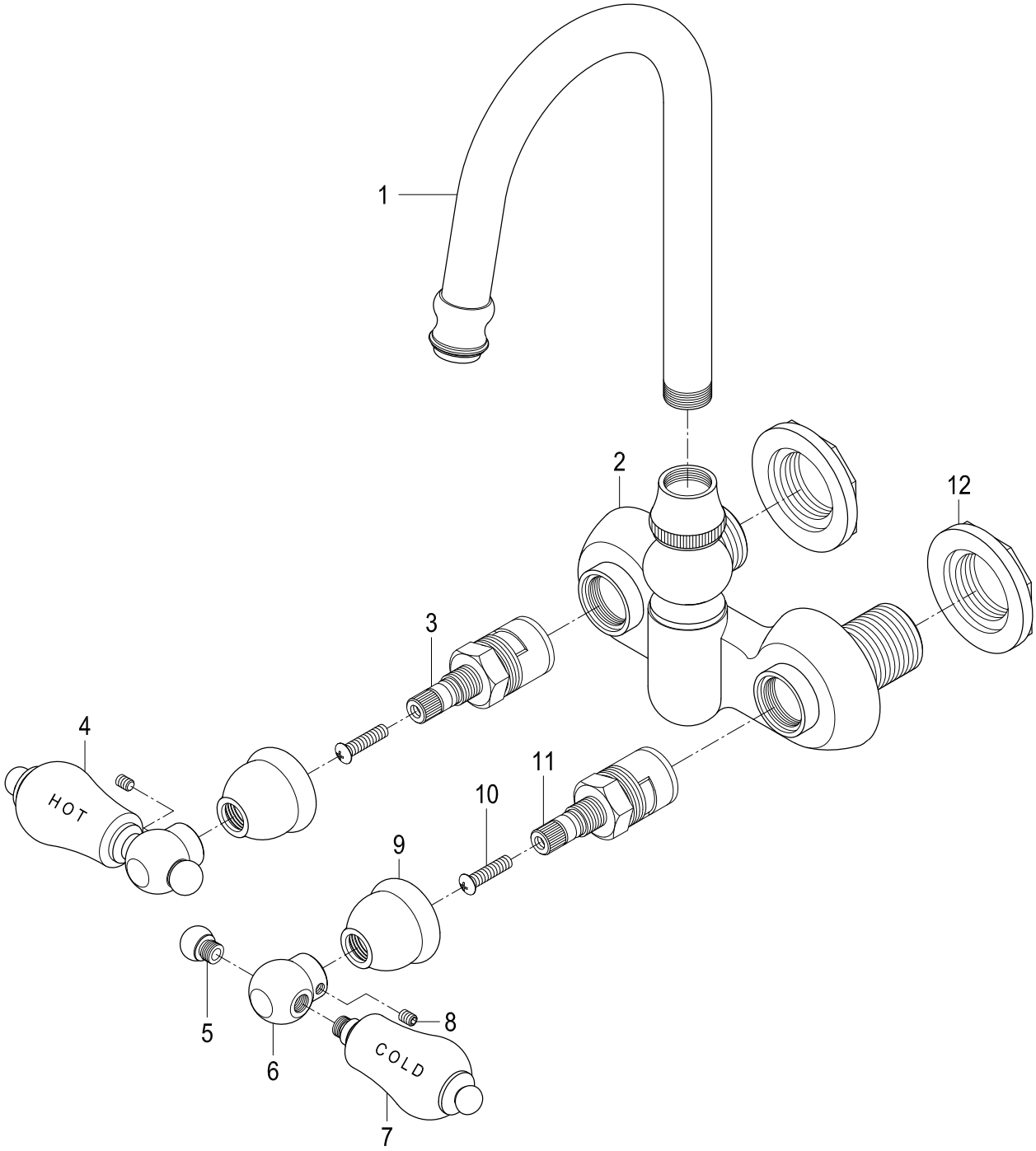
Wall Mount Tub Filler