CC76T1,CC75T2,5,8
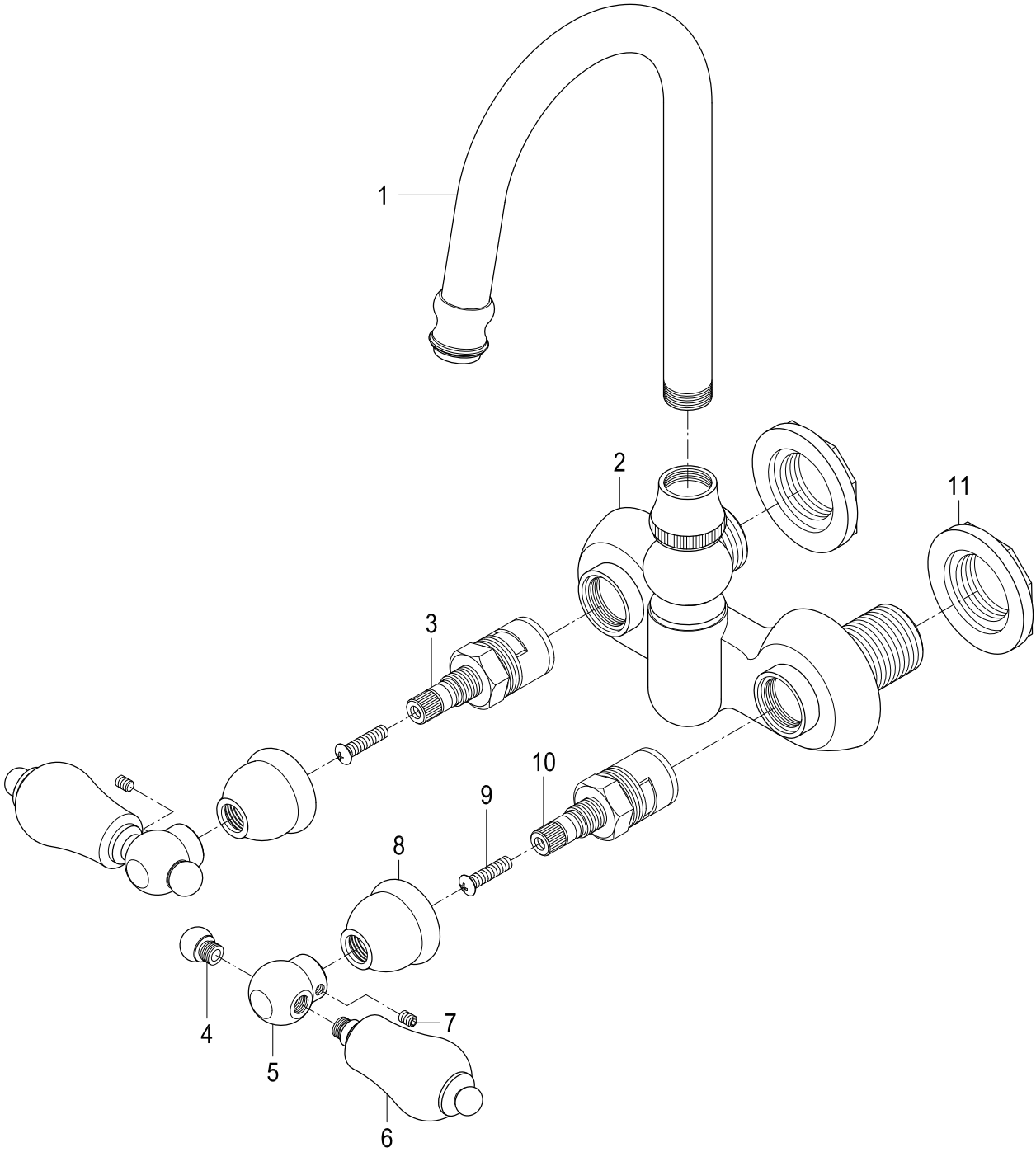
Wall Mount Tub Filler