DD8400,1,6,7,8

Bottle-Trap Brass Round Siphon, 1-1/4″ O.D., 18 Gauge
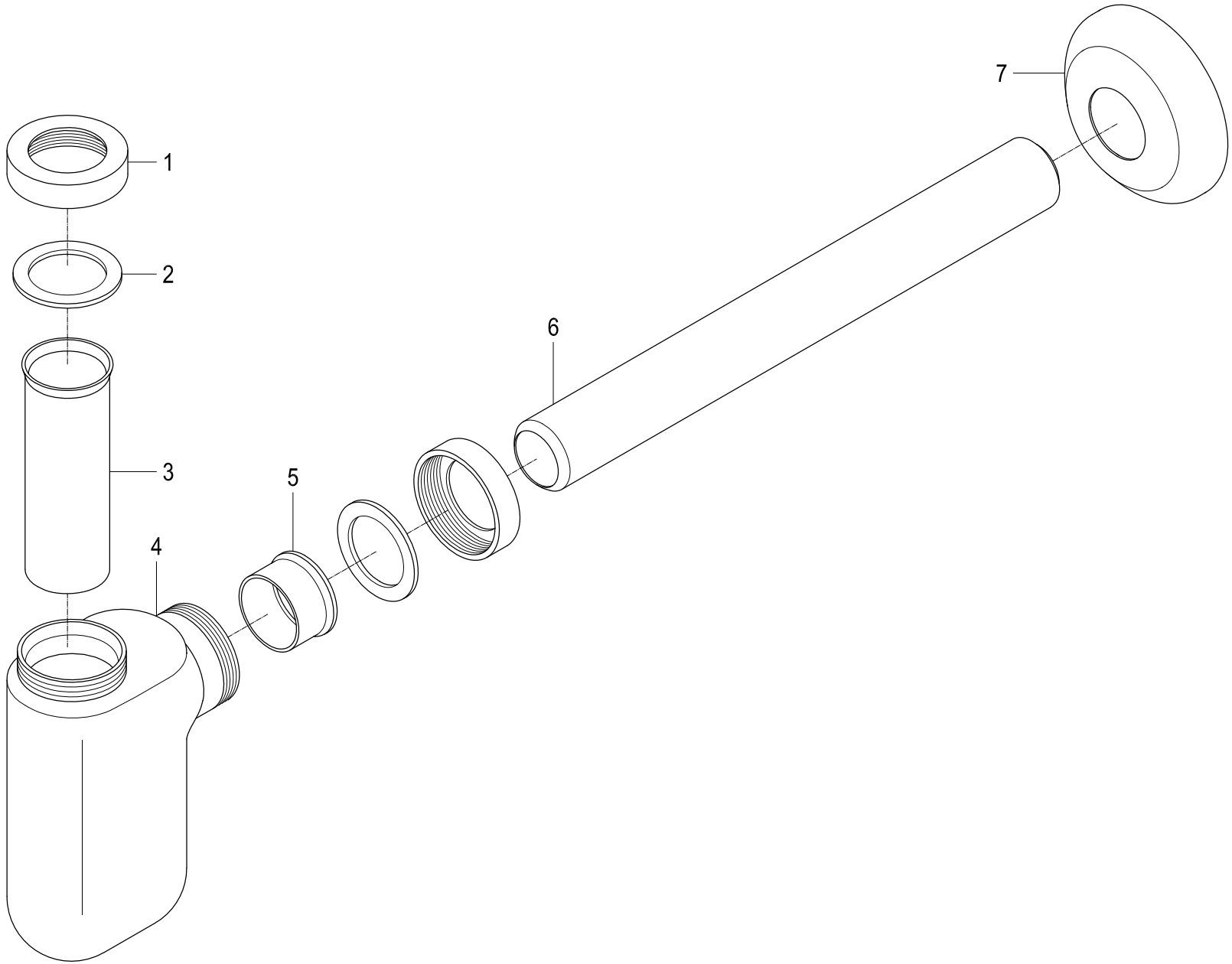
Part #	QTY
1.	2
2.	2
3.	1
4.	1
5.	1
6.	1
7.	1