DR914120,1,2,5,6,7,8
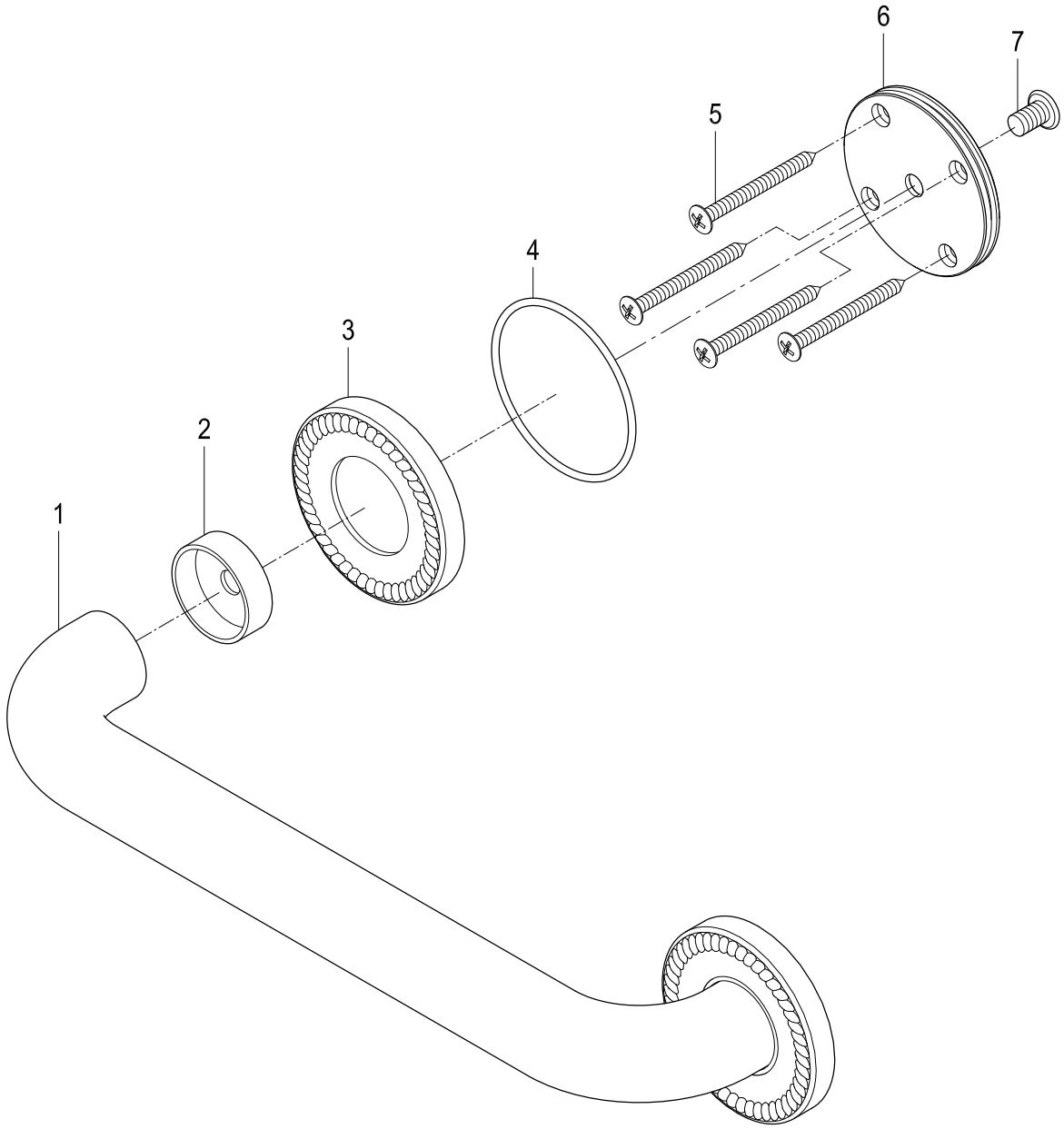
Grab Bar 1-1/4" O.D. x 12", 17 Gauge