DRF914120,1,2,5,6,7,8
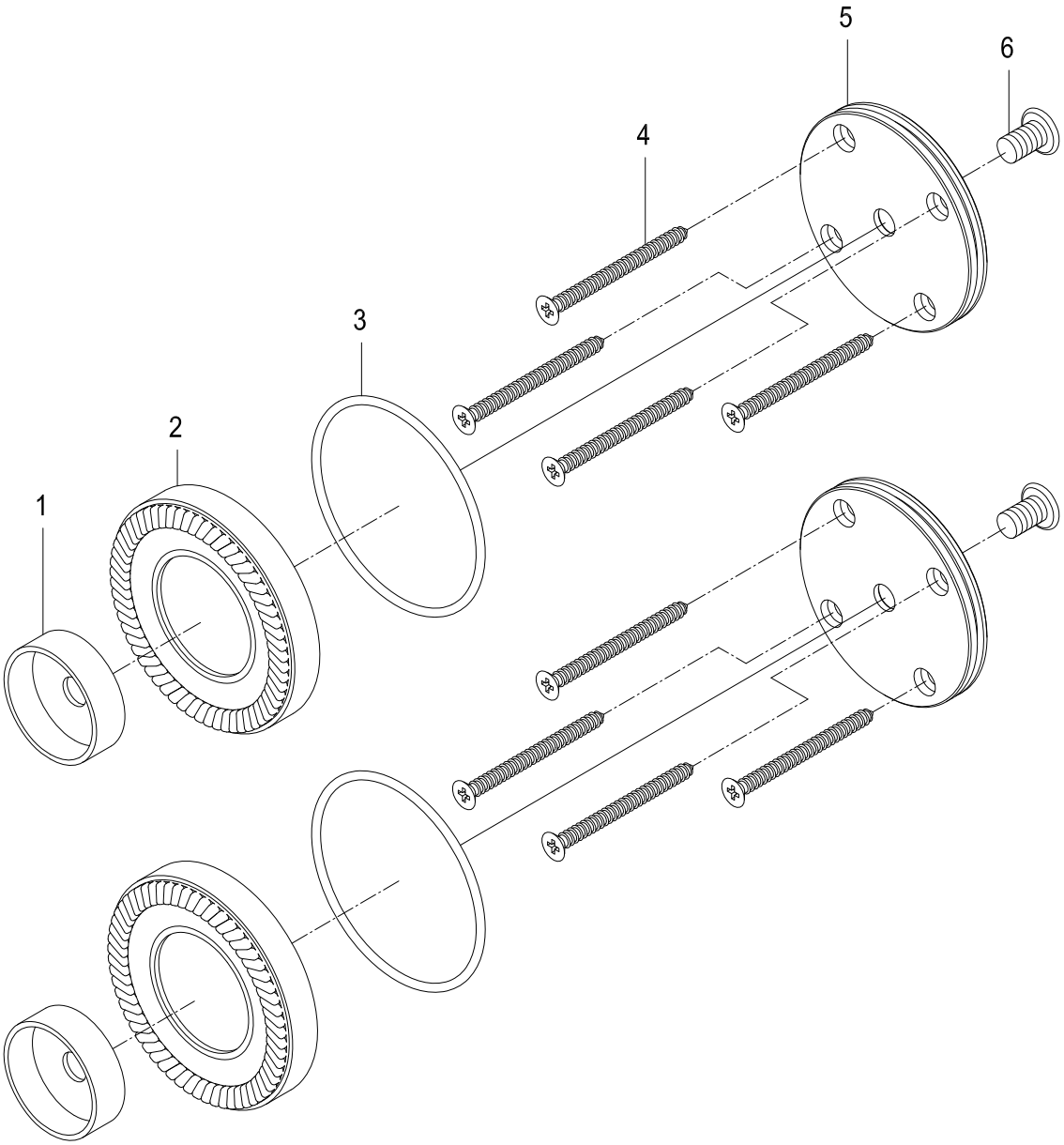
1-1/4" O.D. Grab Bar, Flange Only