DTL5303A0,1,2,3,5,6,7,8
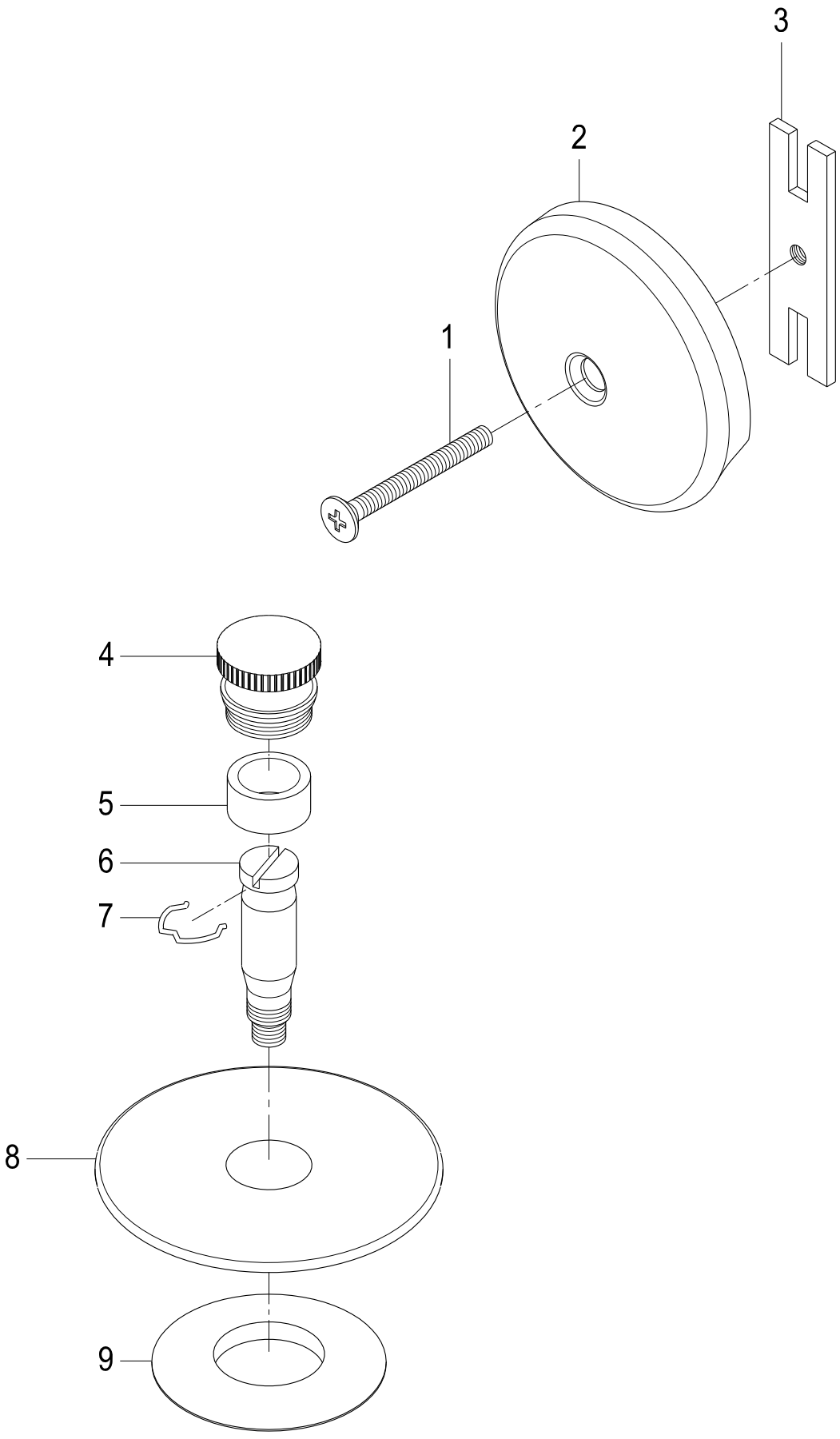
Tub Drain Replacement Trim Kit