FB7611,5,8ZX
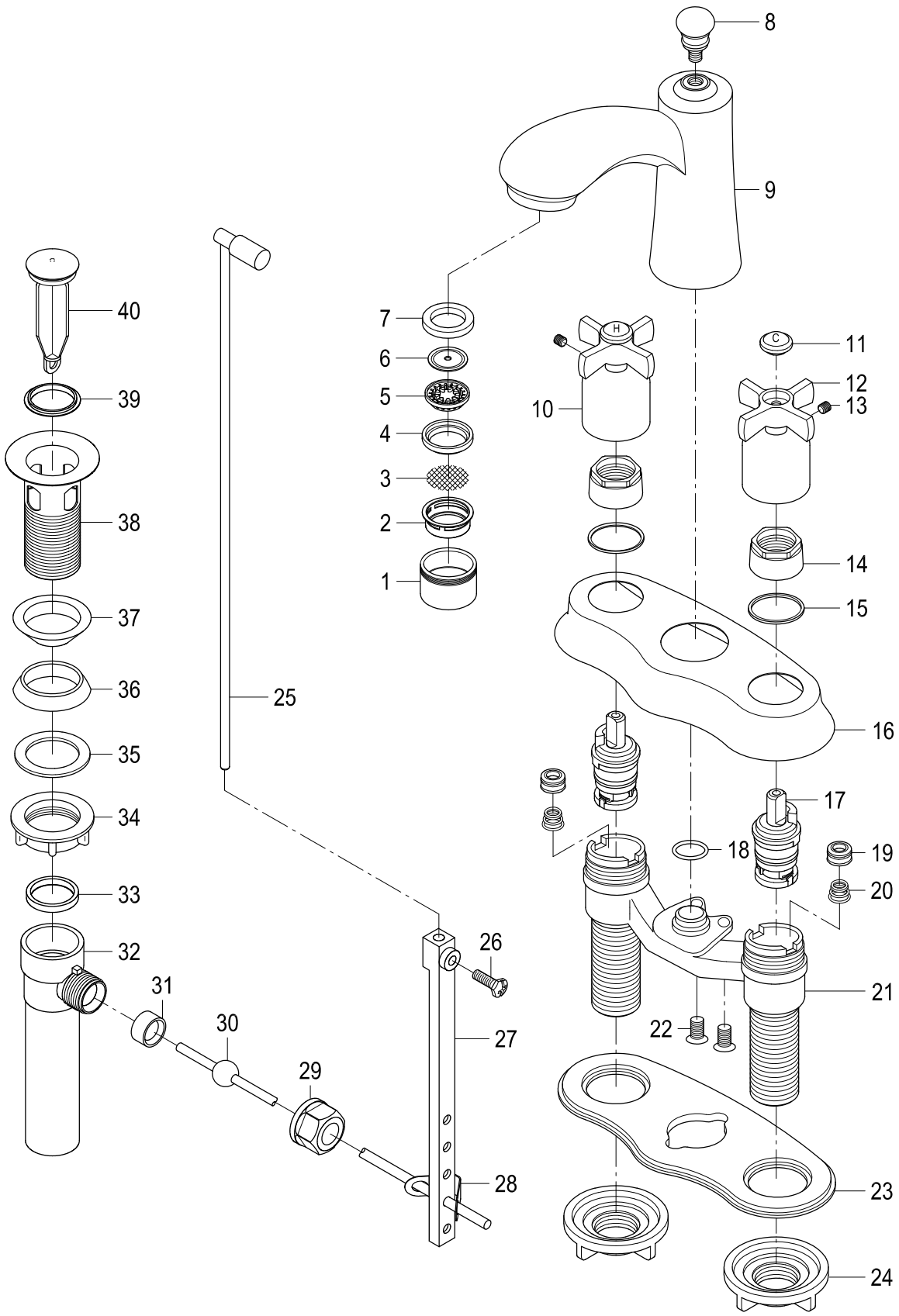
Twin Handles 4" Centerset Lavatory Faucet With Retail Pop-Up