FSC4641,5,8DL
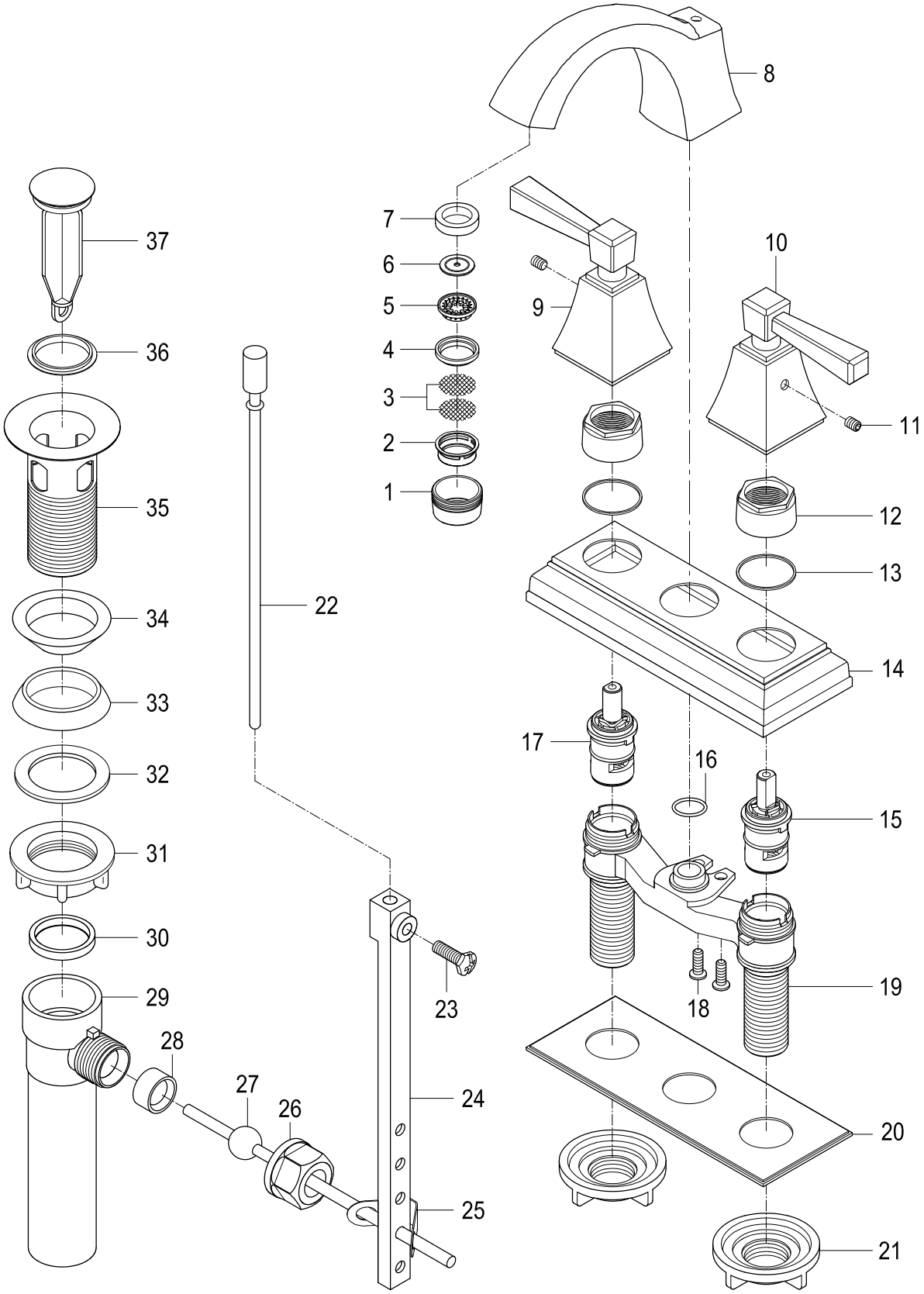
Twin Handles 4" Centerset Lavatory Faucet with Retail Pop-Up