FSCH1970,1,2,3,4,5,6,8,9,33APXH

Cross Handle, Hot
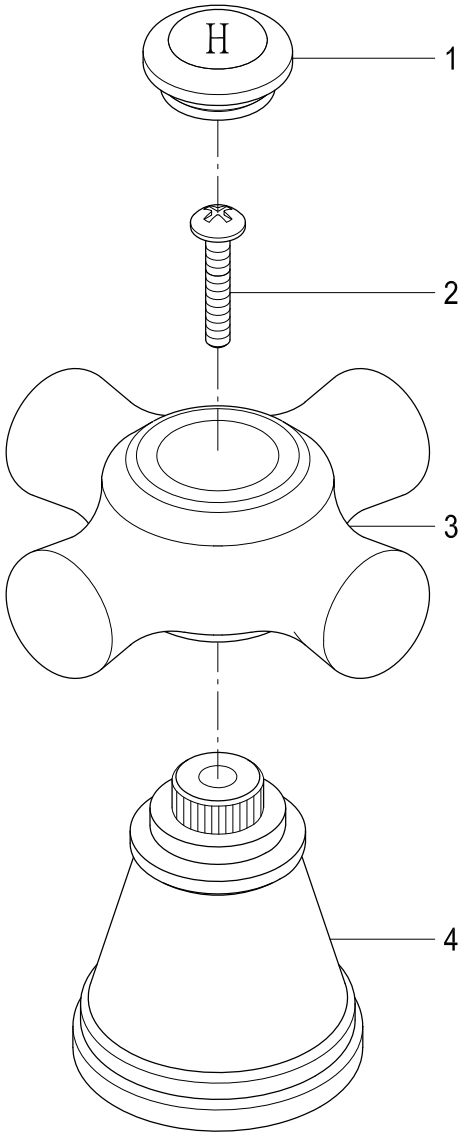
Part #	QTY
1.	1
2.	1
3.	1
4.	1