GKB1632,4,7,8,9
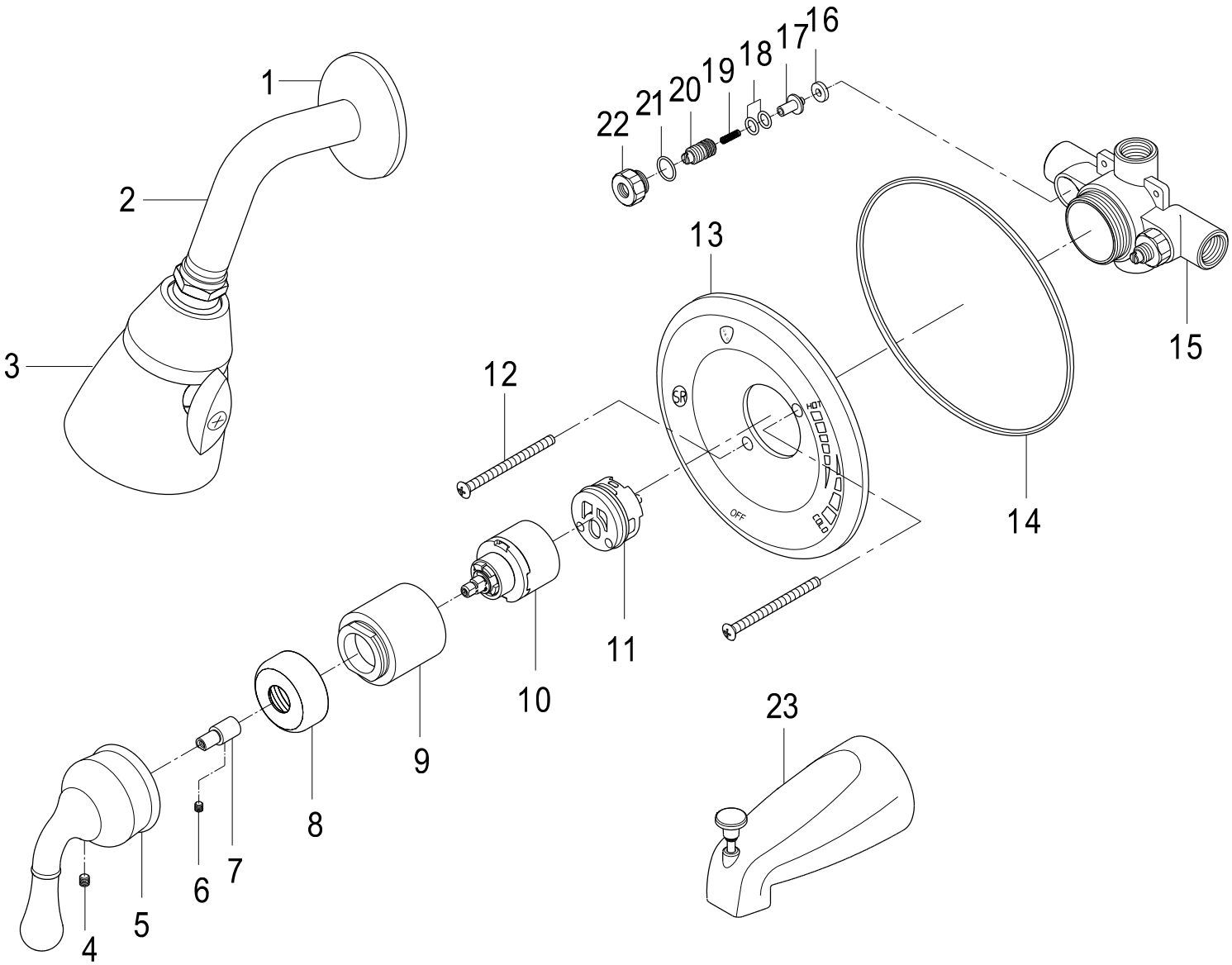
Single Handle Pressure Balanced Tub & Shower Faucet