GS8725,6DL
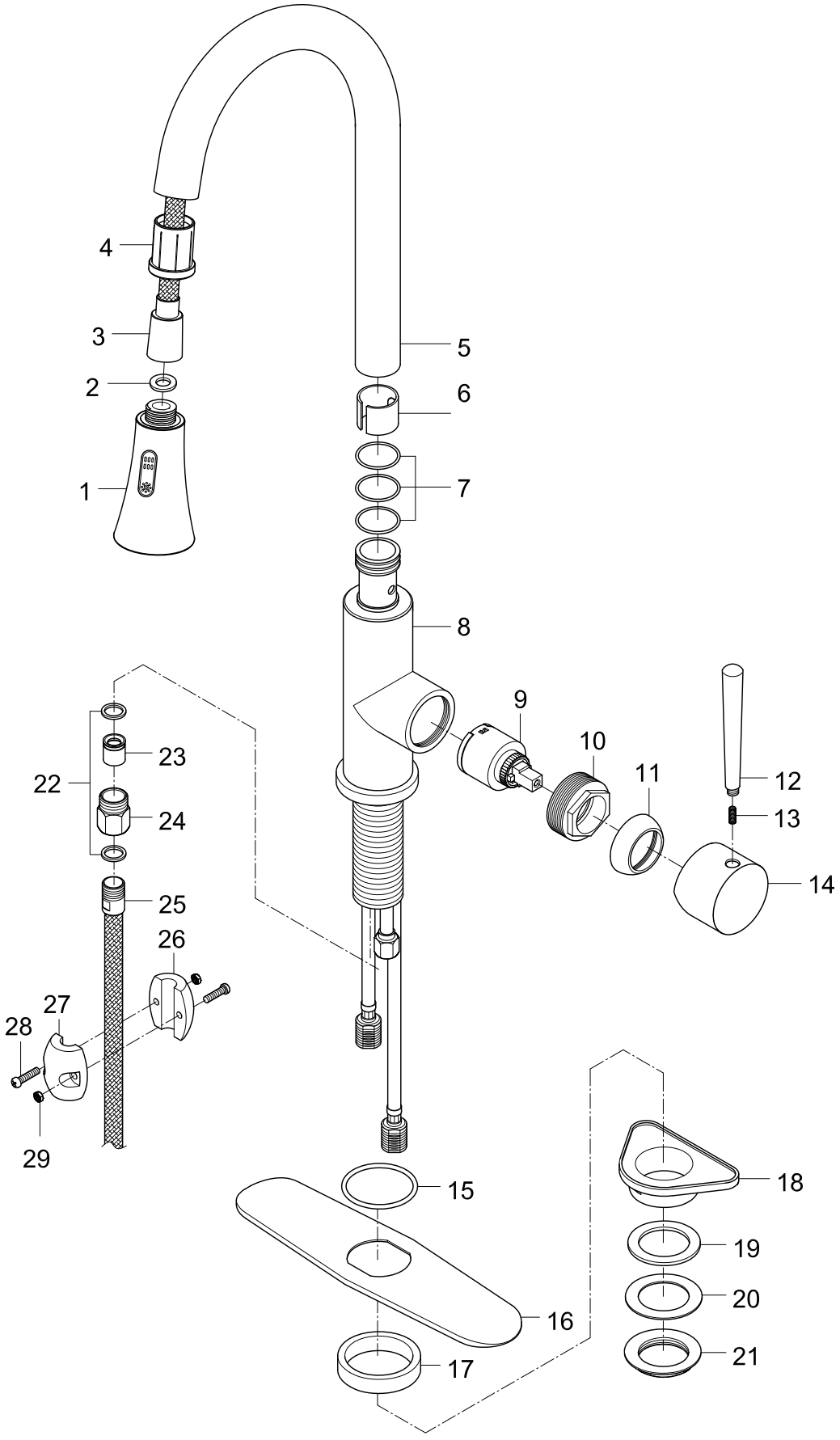
Single Handle Pull-Down Kitchen Faucet