KB245SO
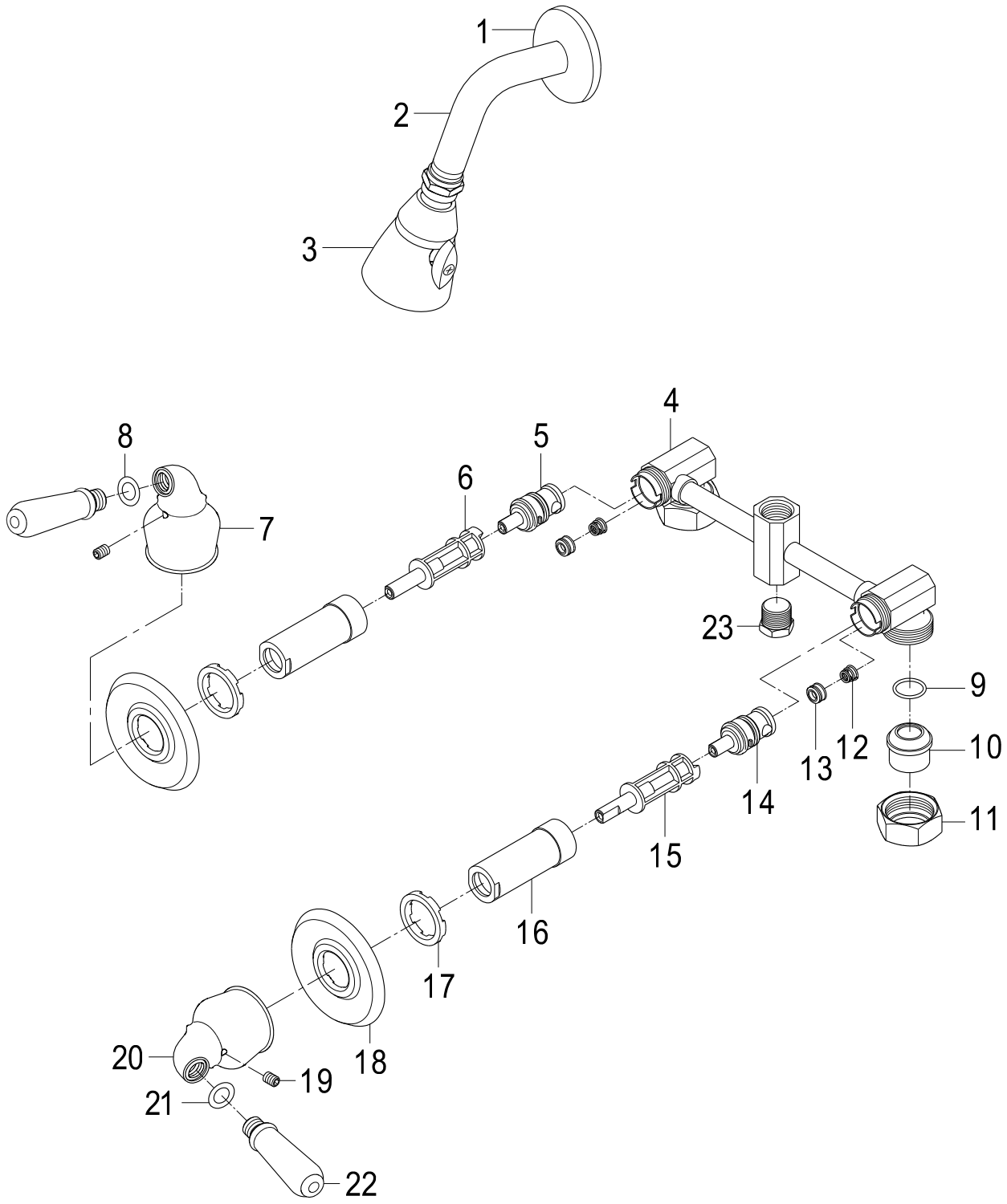
Twin Handles Tub & Shower Faucet, Shower Only