KB4631,2,5,8DL
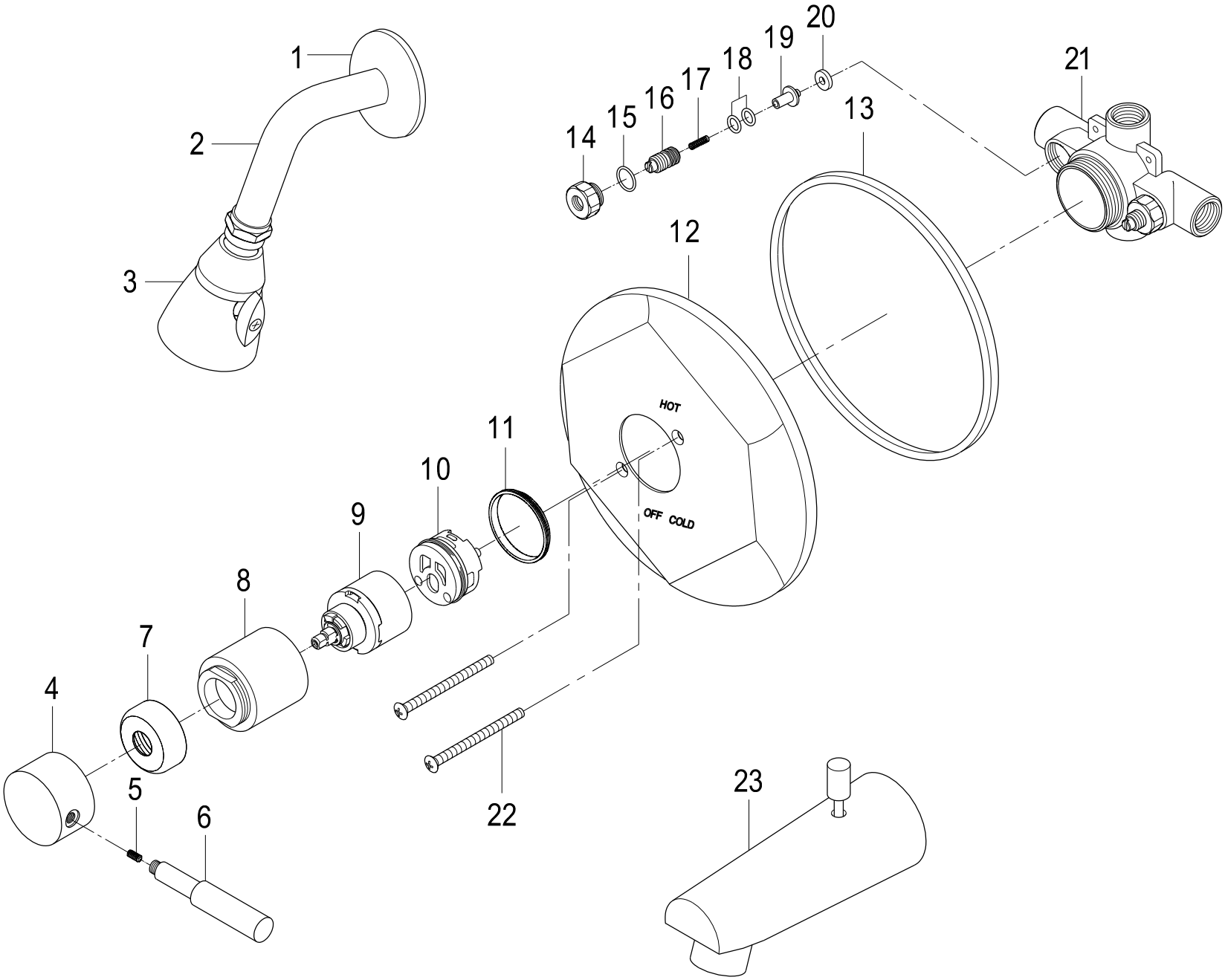
Single Handle Pressure Balanced Tub & Shower Faucet