KB632,3,5,7,8,9T

Single Handle Pressure Balanced Tub & Shower Faucet, Trim Only

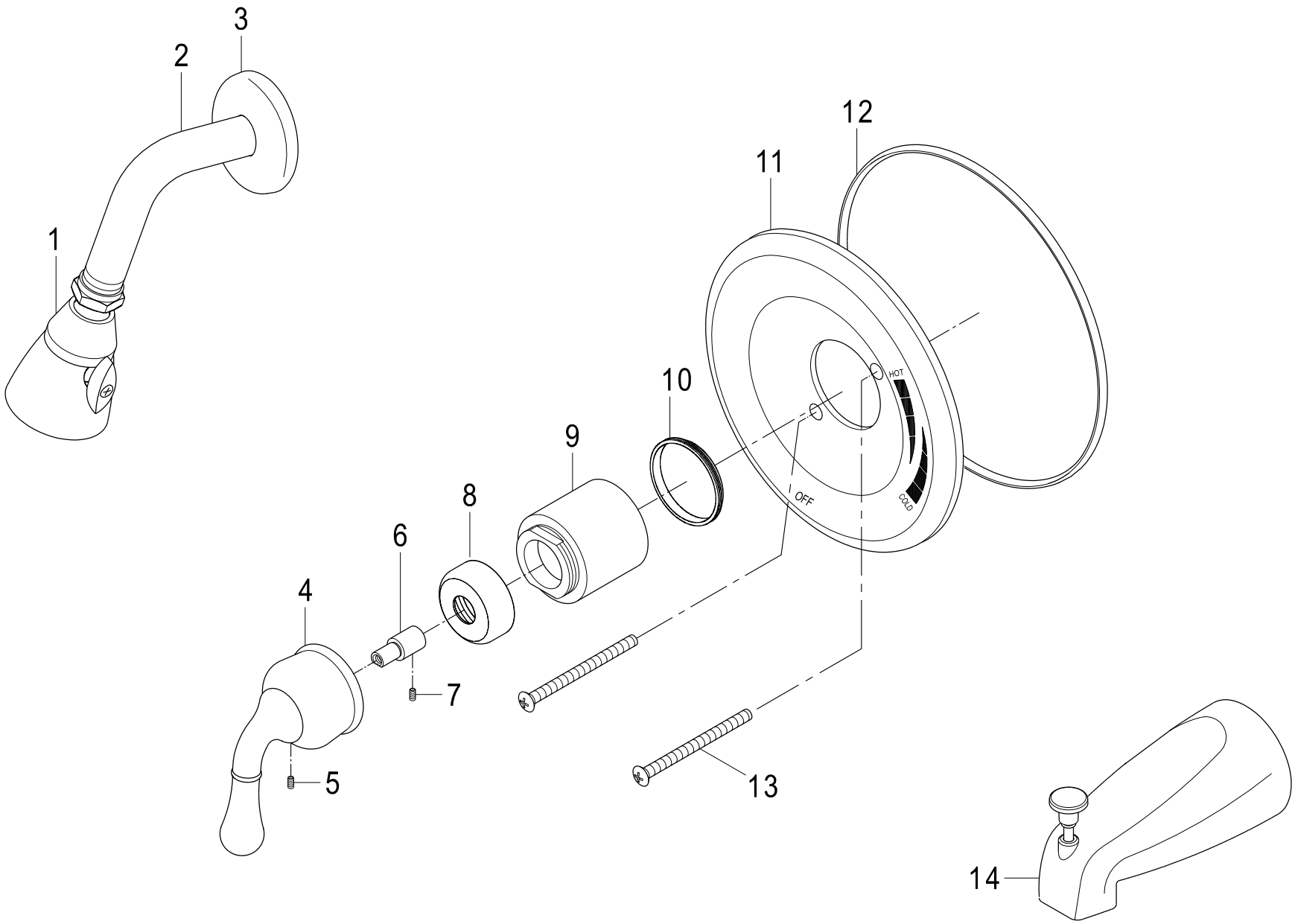

Ref# KB632,3,5,7,8,9T | 2012-06-A