KB86510,20,50,80CQL

Single Handle Pressure Balanced Tub & Shower Faucet With Diverter

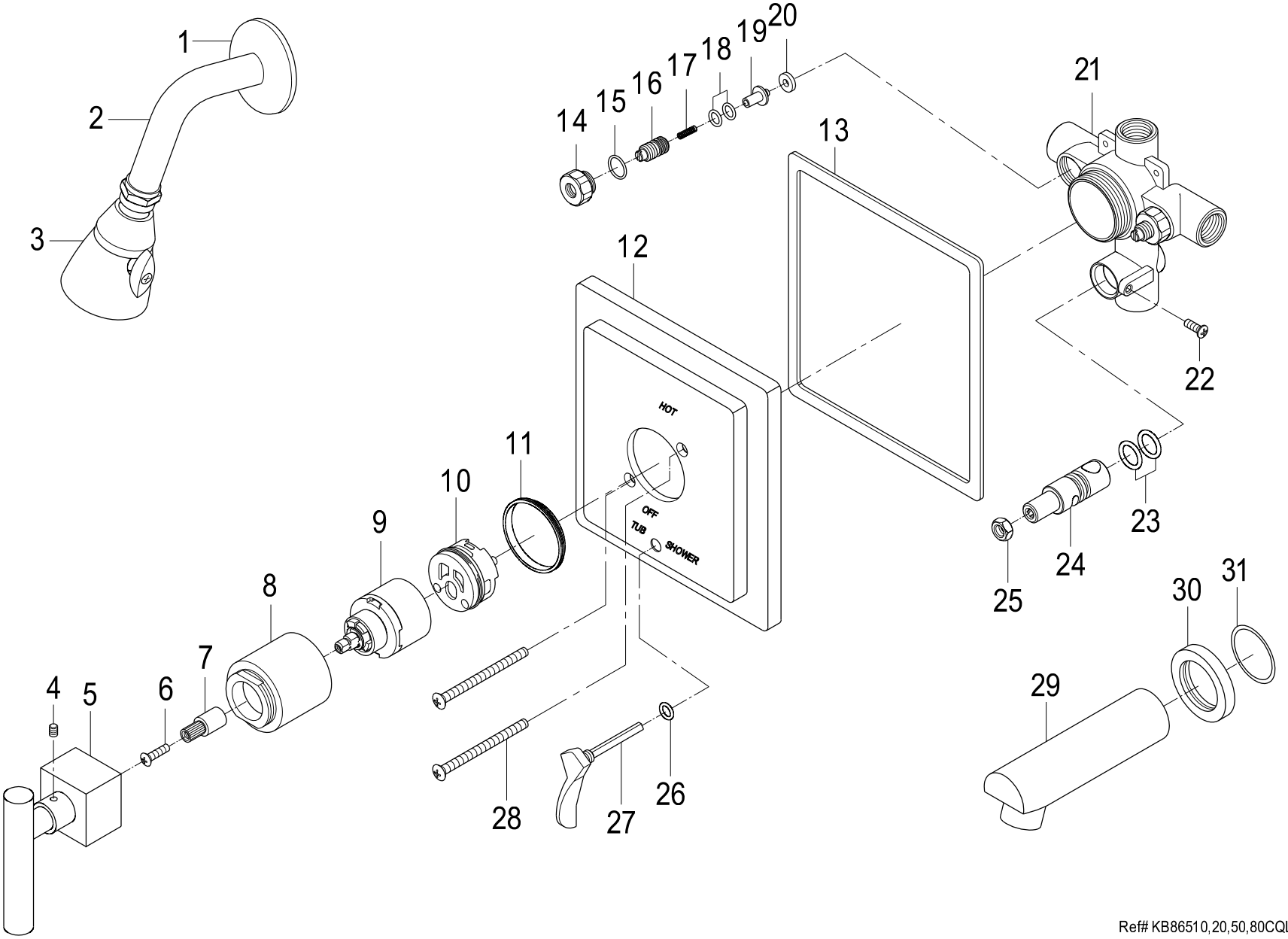

Ref# KB86510,20,50,80CQL | 2013-06-A