KB8698ZL
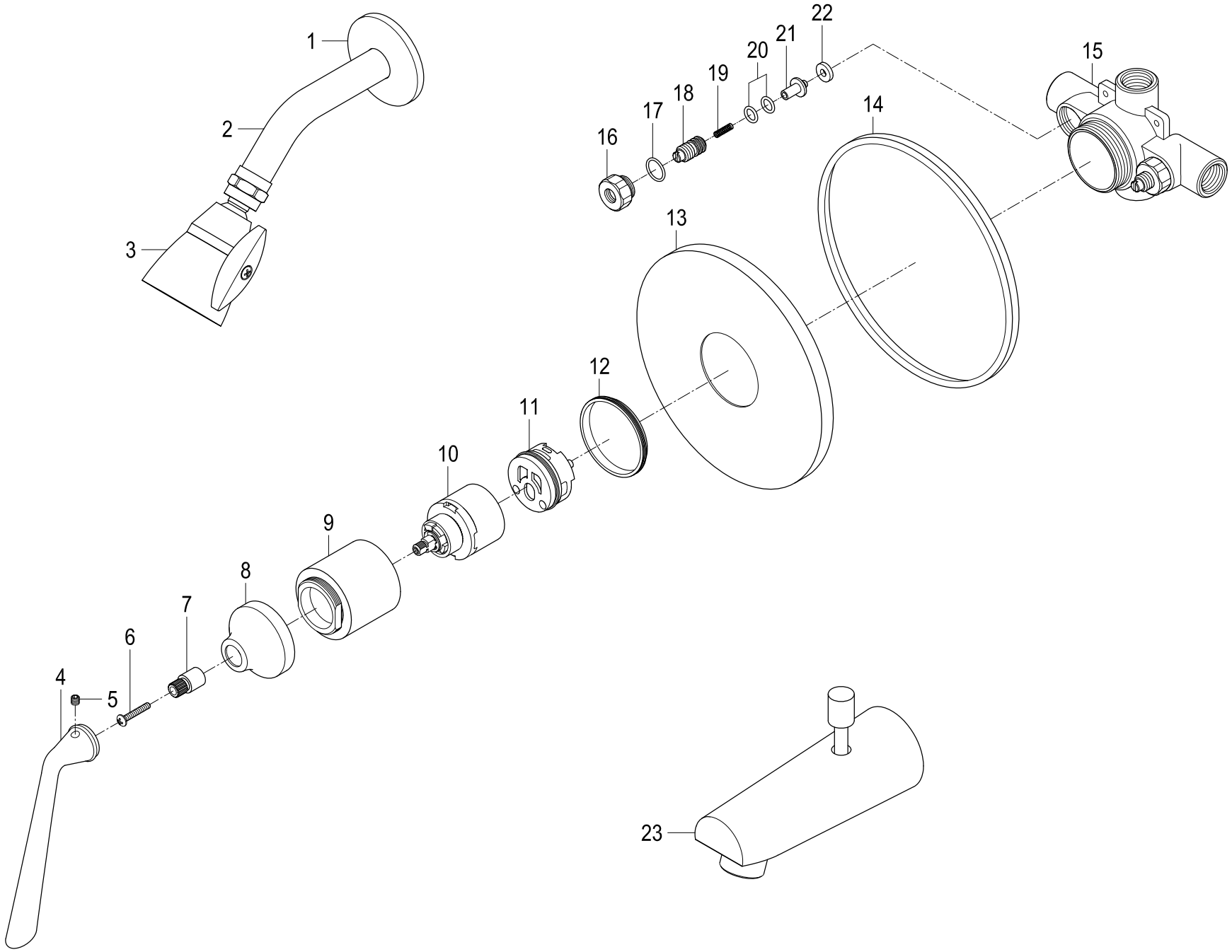
Single Handle Pressure Balanced Tub & Shower Faucet