KBH2600,1,2,4,5,7,8,9KLC

Lever Handle, Cold
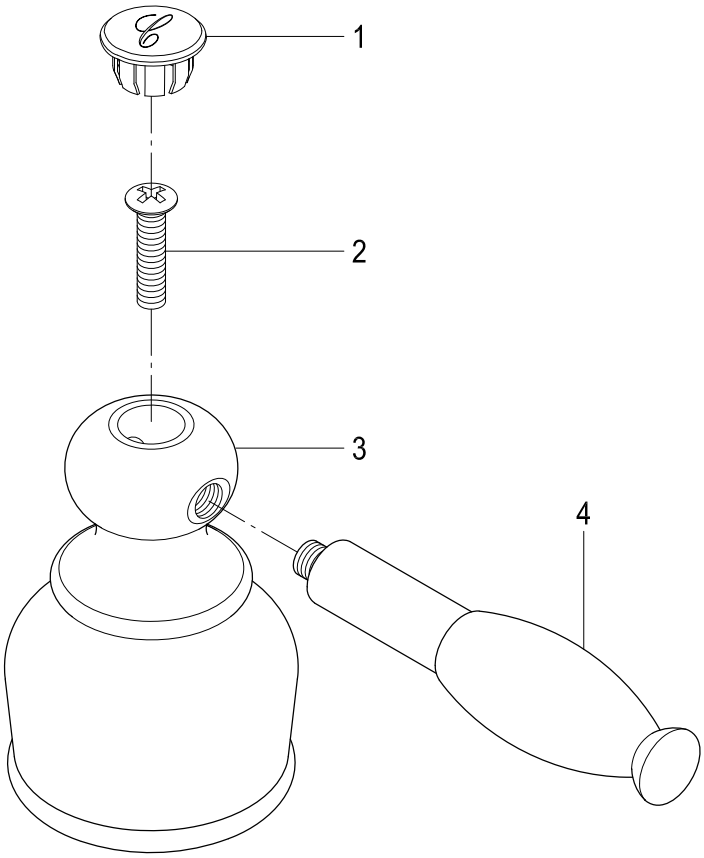
Part #	QTY
1.	1
2.	1
3.	1
4.	1