KBH600,1,2,4,5,6,7,8,9PLH,3PLAB,6PLPN,7PLSBH
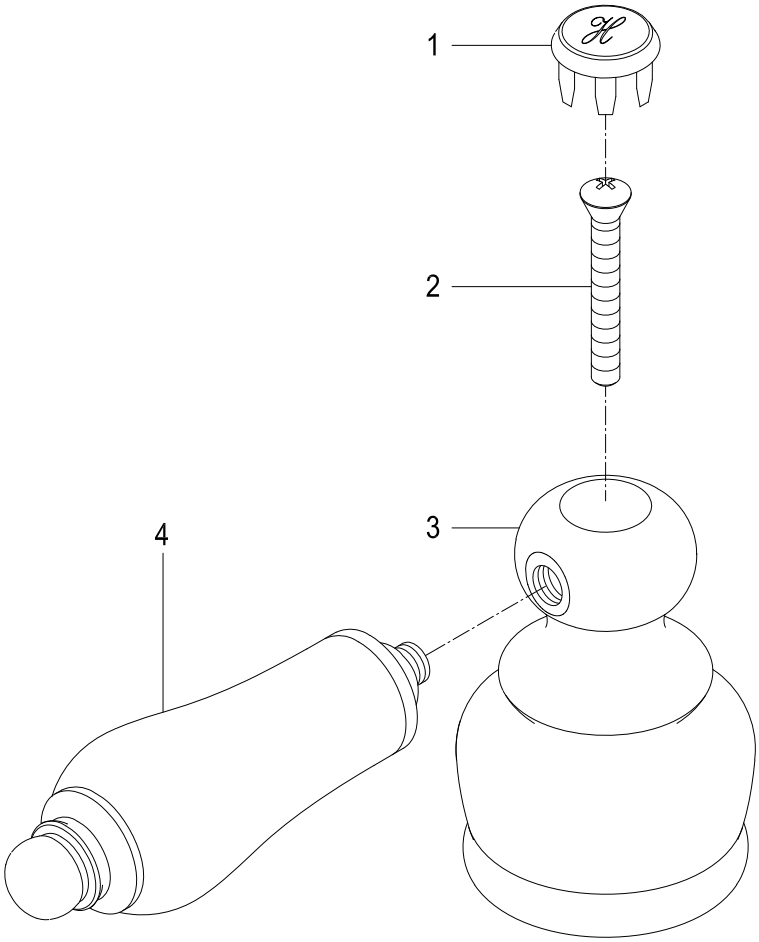
Lever Handle, Hot