KBH8660,1,2,3,5,6,7,8NDLC,NDLACC
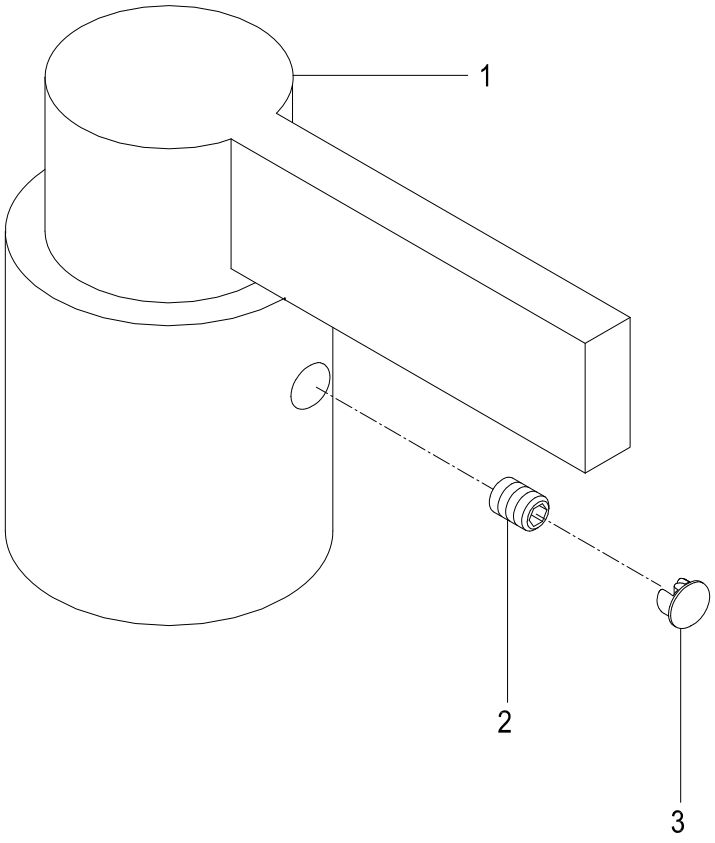
Lever Handle, Cold