KBH8960,1,2,5,6,7,8NDLC

Lever Handle, Cold
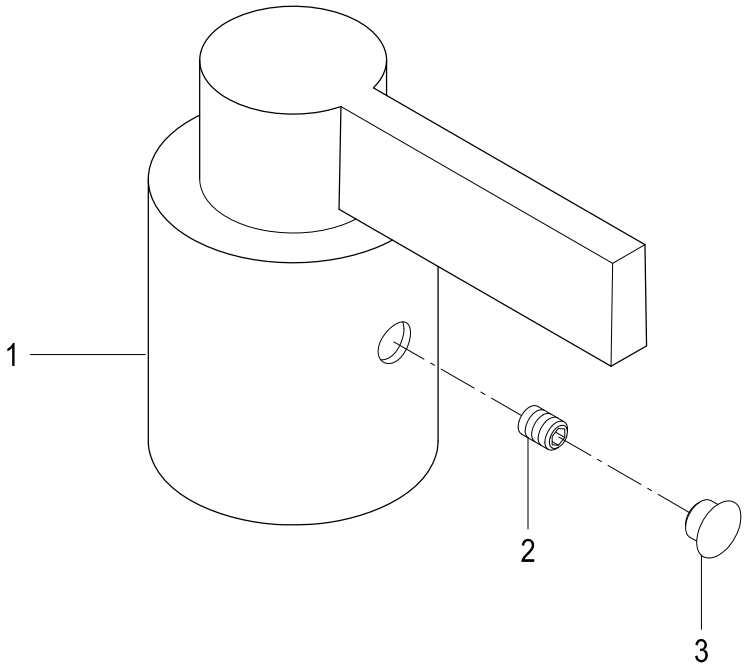
Part #	QTY
1.	1
2.	1
3.	1