KBH8960,1,2,5,6,7,8NDLH

Lever Handle, Hot
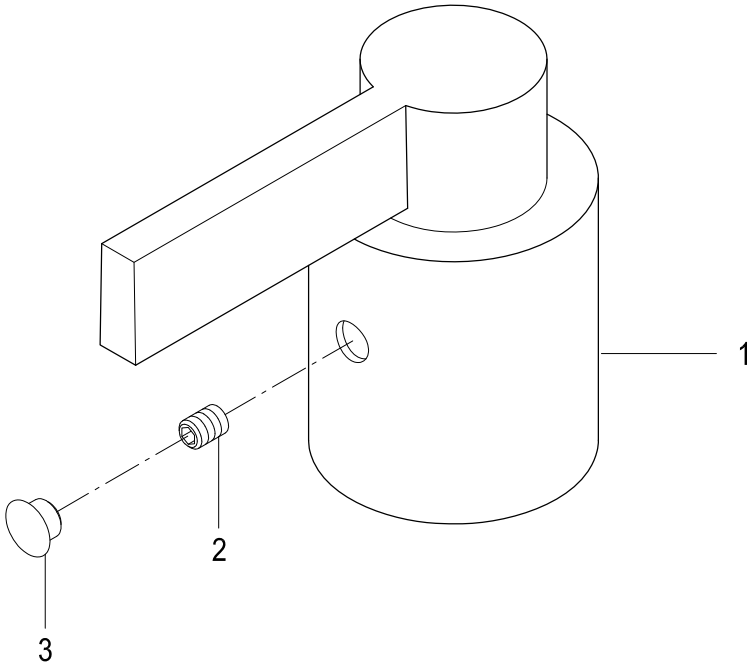
Part #	QTY
1.	1
2.	1
3.	1