KBH8960,1,2,3,5,6,7,8DPLH,DPLACH
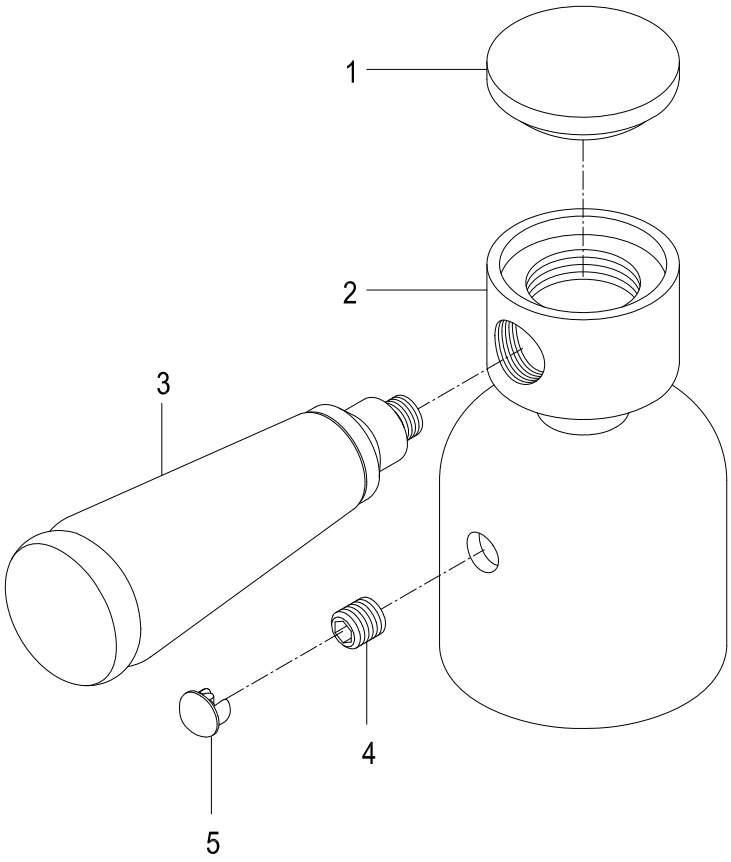
Lever Handle, Hot