KBX8140,1,2,3,6,7,8KNL
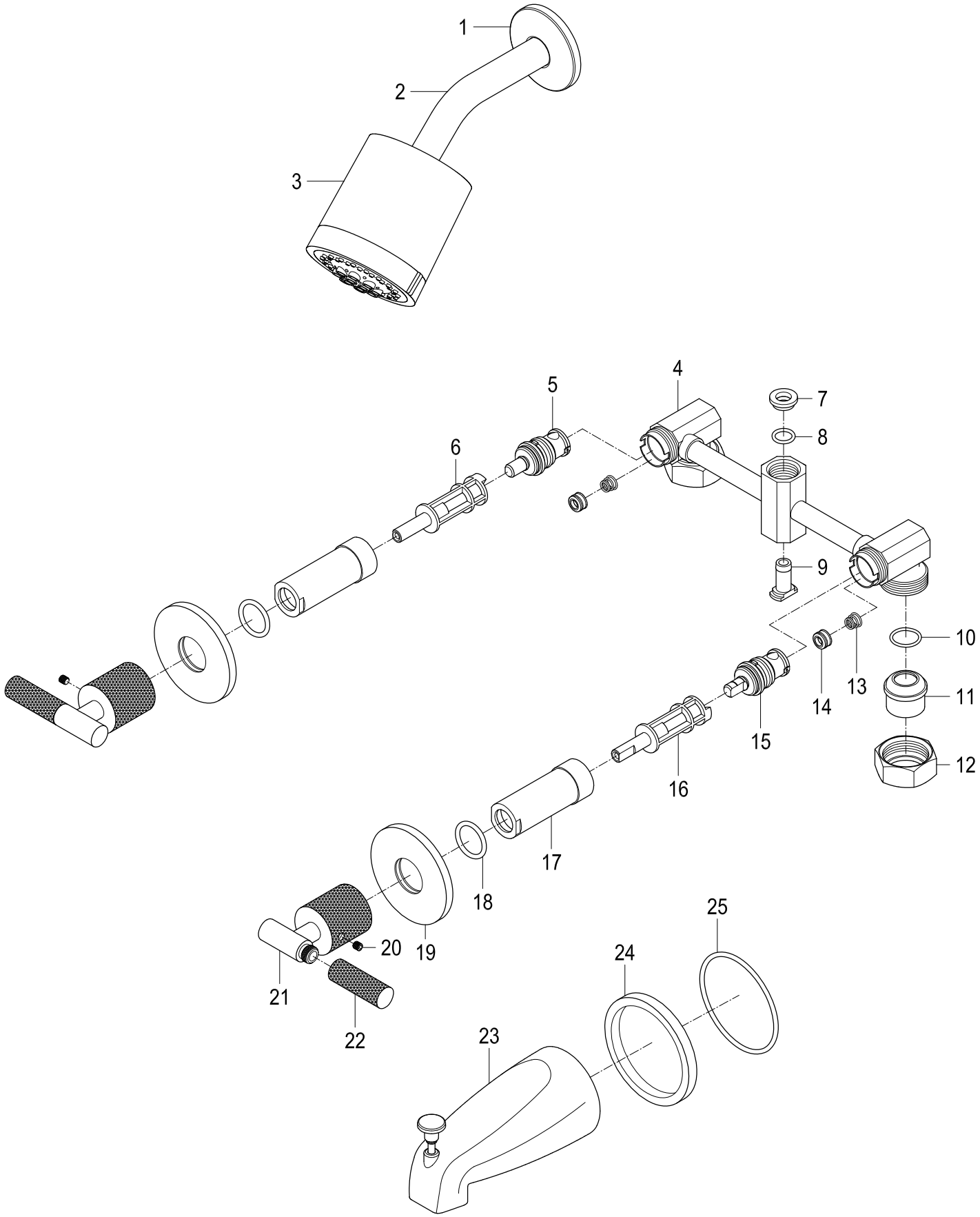
Twin Handles Tub & Shower Faucet