KS3040,1,2,3,5,6,7,8AX
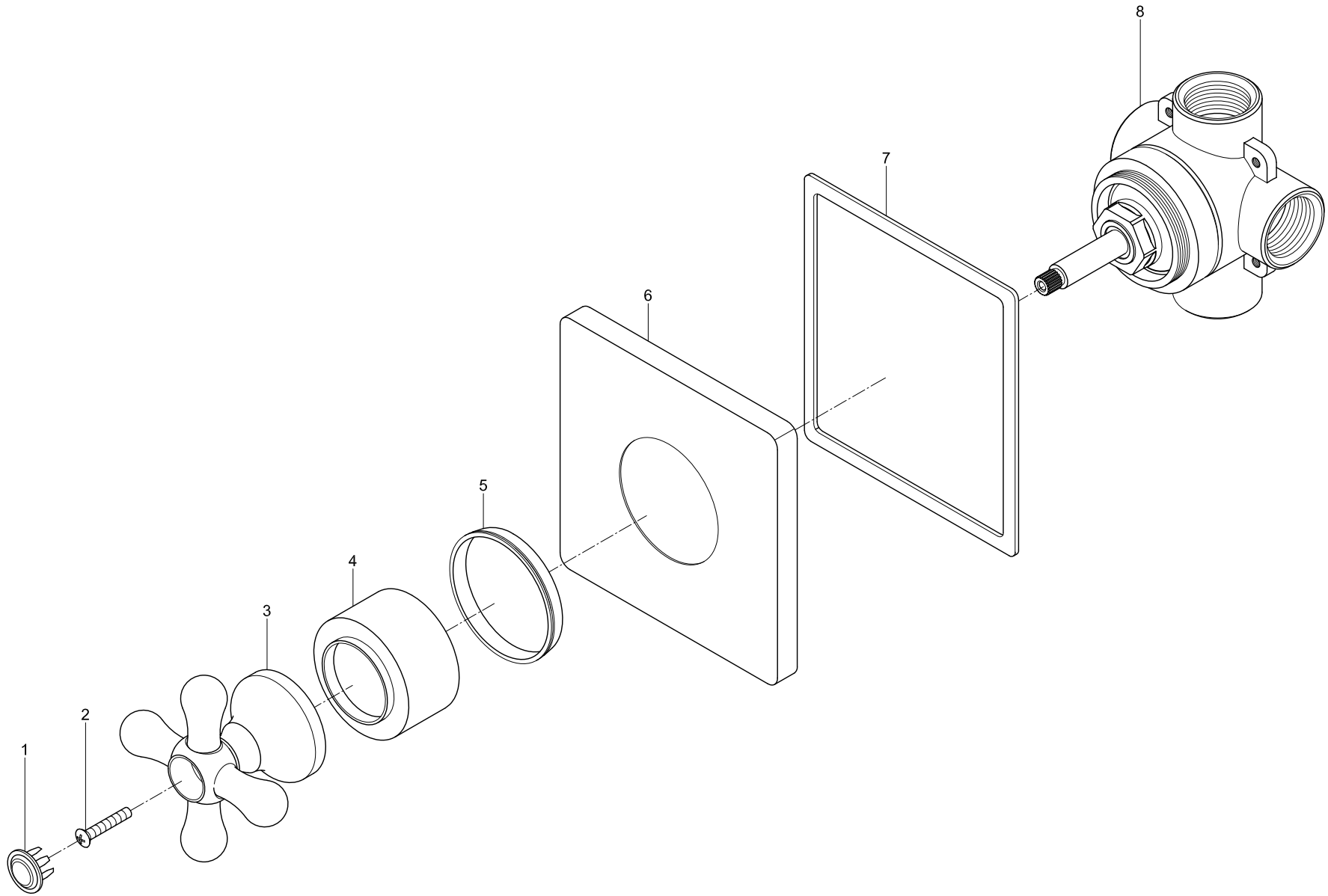
Three-Way Diverter Valve With Single Handle & Square Plate