KS36300,10,20,30,50,70,80PL
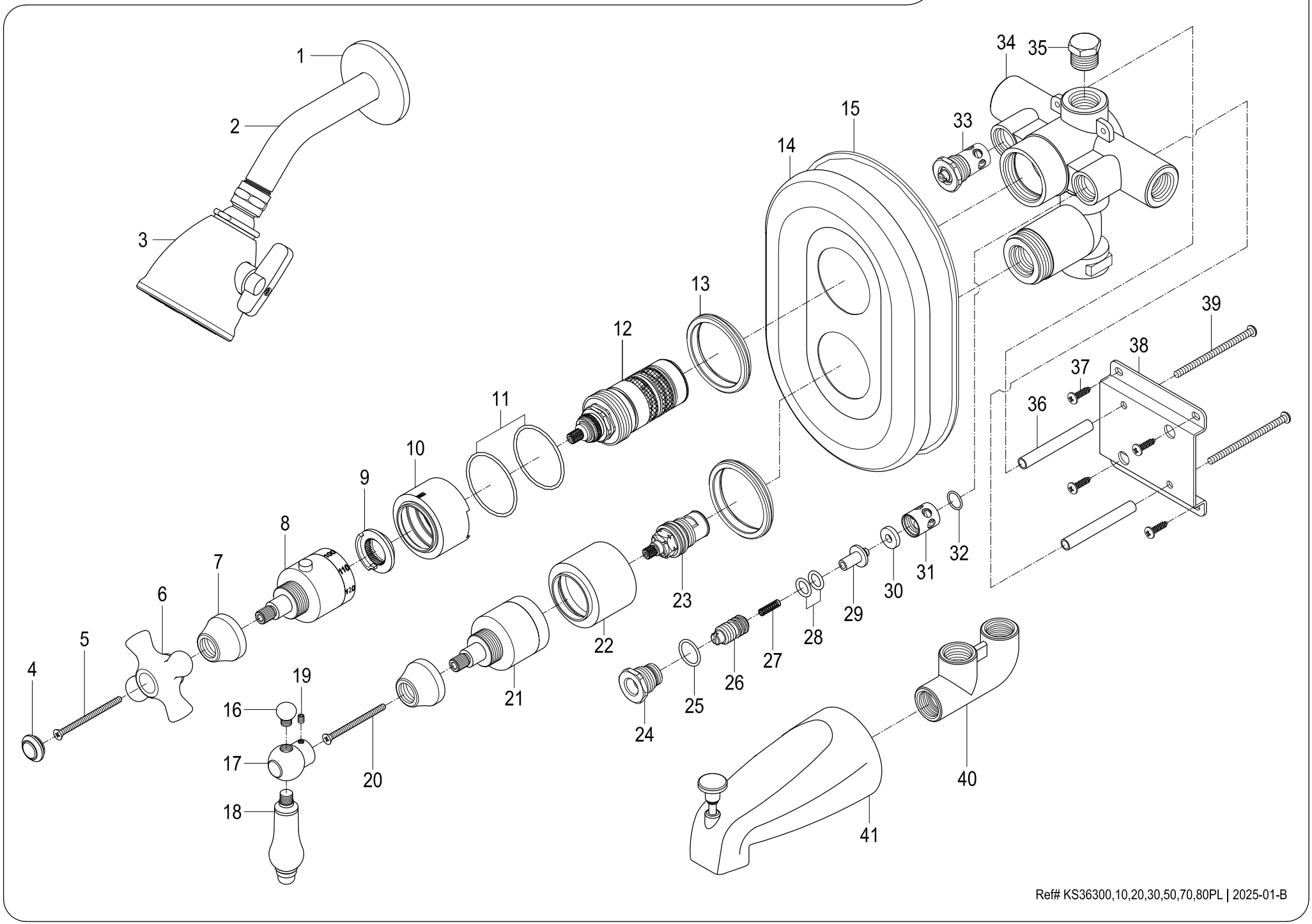
Thermostatic Mixer Valve Tub & Shower Faucet