KS7020,1,2,3,5,6,7,8BAL
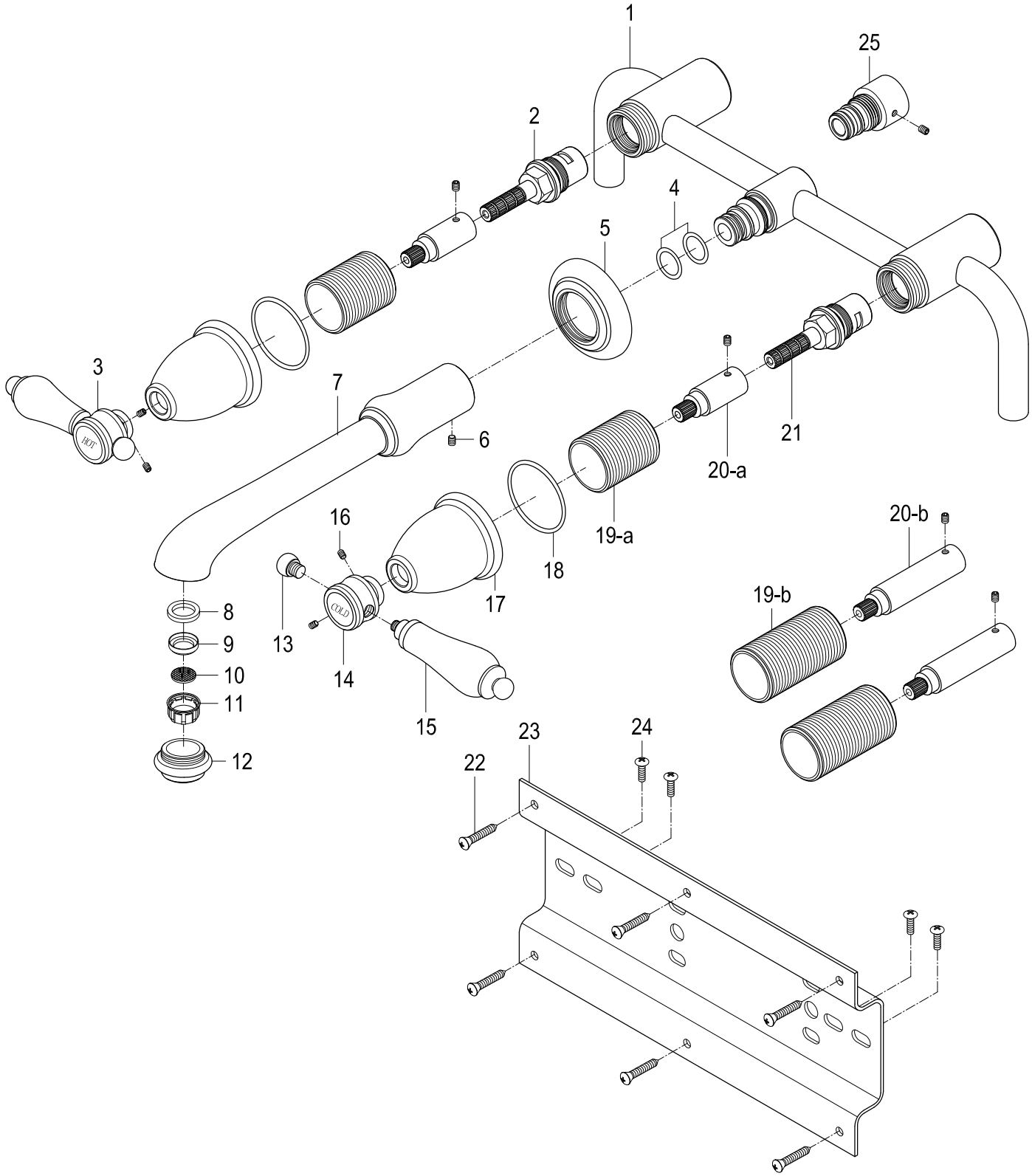
Twin Handles Wall Mount Tub Filler