KINGSTON

TO ORDER PARTS, CALL: 1-877-252-7277
www.kingstonbrass.com

KS86130,1,6,7,8DLE

Pressure Balanced Shower Faucet with 3-Way Diverter

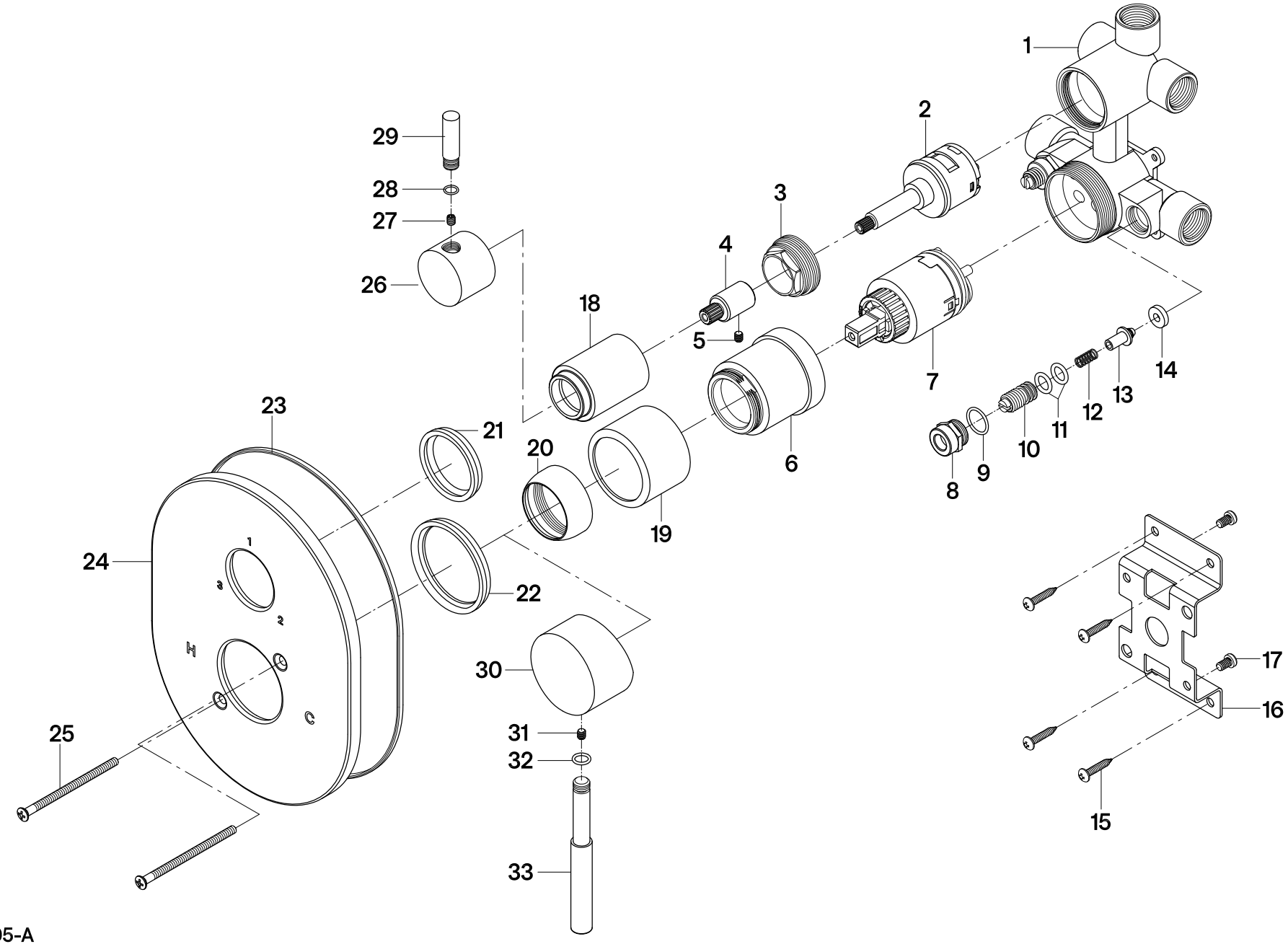

2026-05-A