KSD2230,6,7KL
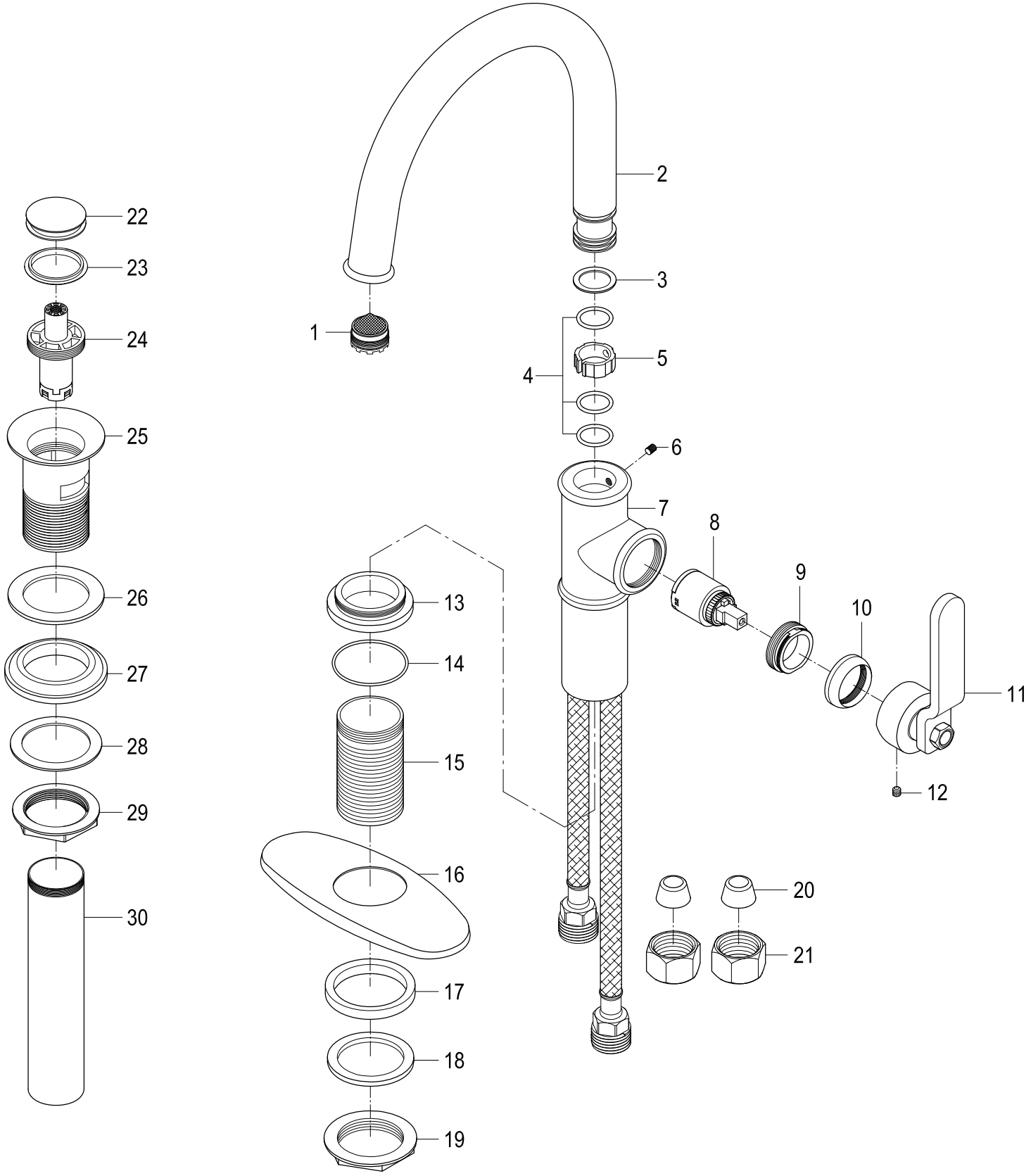
Single Handle Lavatory Faucet with Push-up Pop-Up