KSH2940,1,2,3,4,5,6,7,8CGC
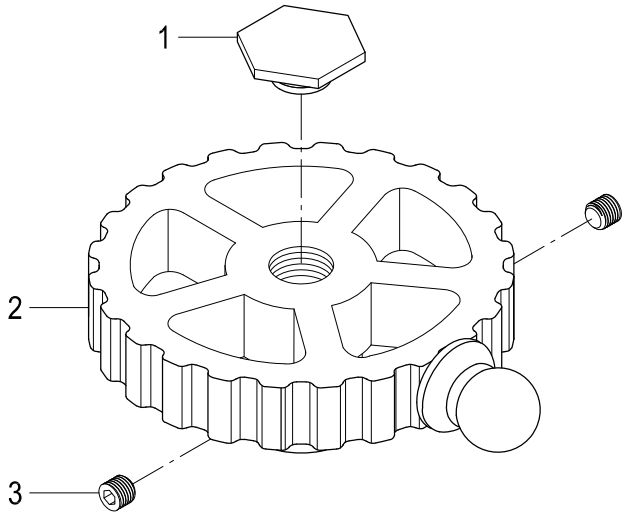
Wheel Handle, Cold