KSH2950,1,2,3,5,6,7,8ZXC,ZXACC
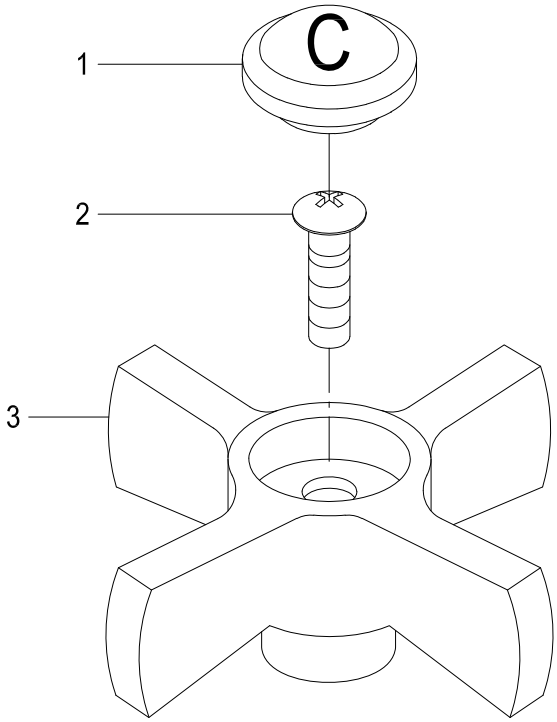
Cross Handle, Cold