KSH7410,1,2,5,7,8DPL
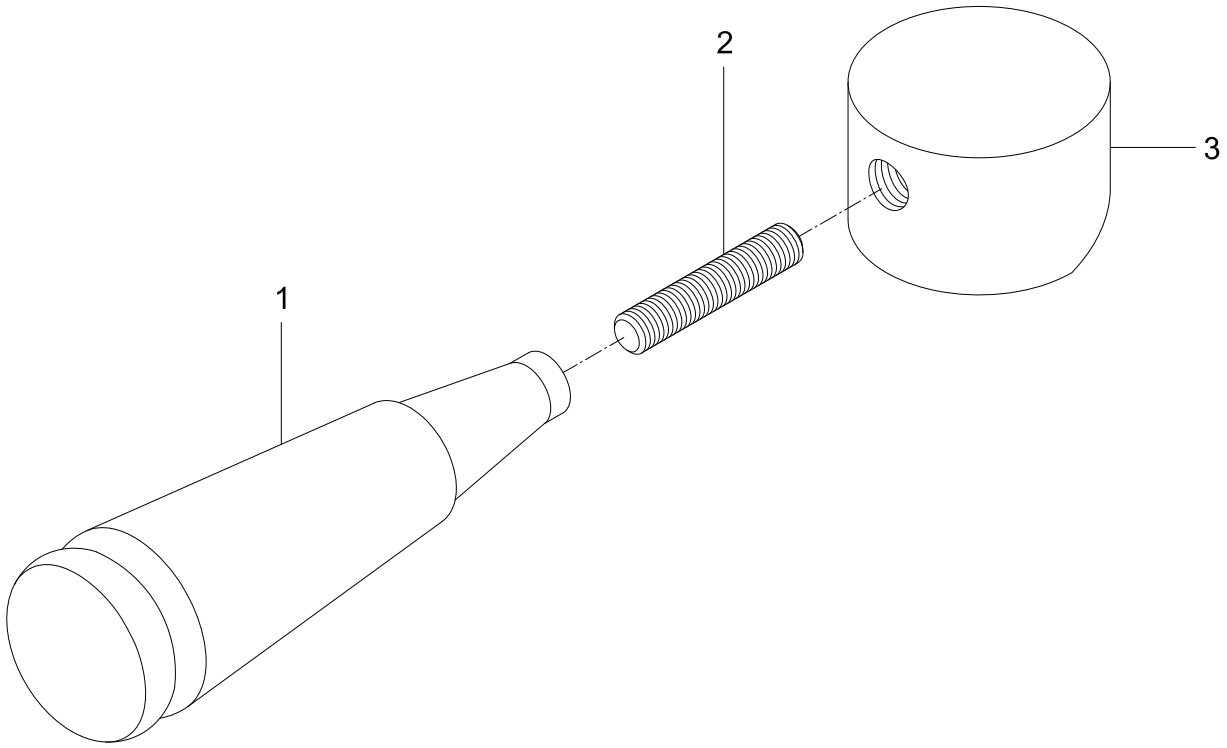
Single Handle