KSH814,MB,PB,ORB,PN,SB,SNH
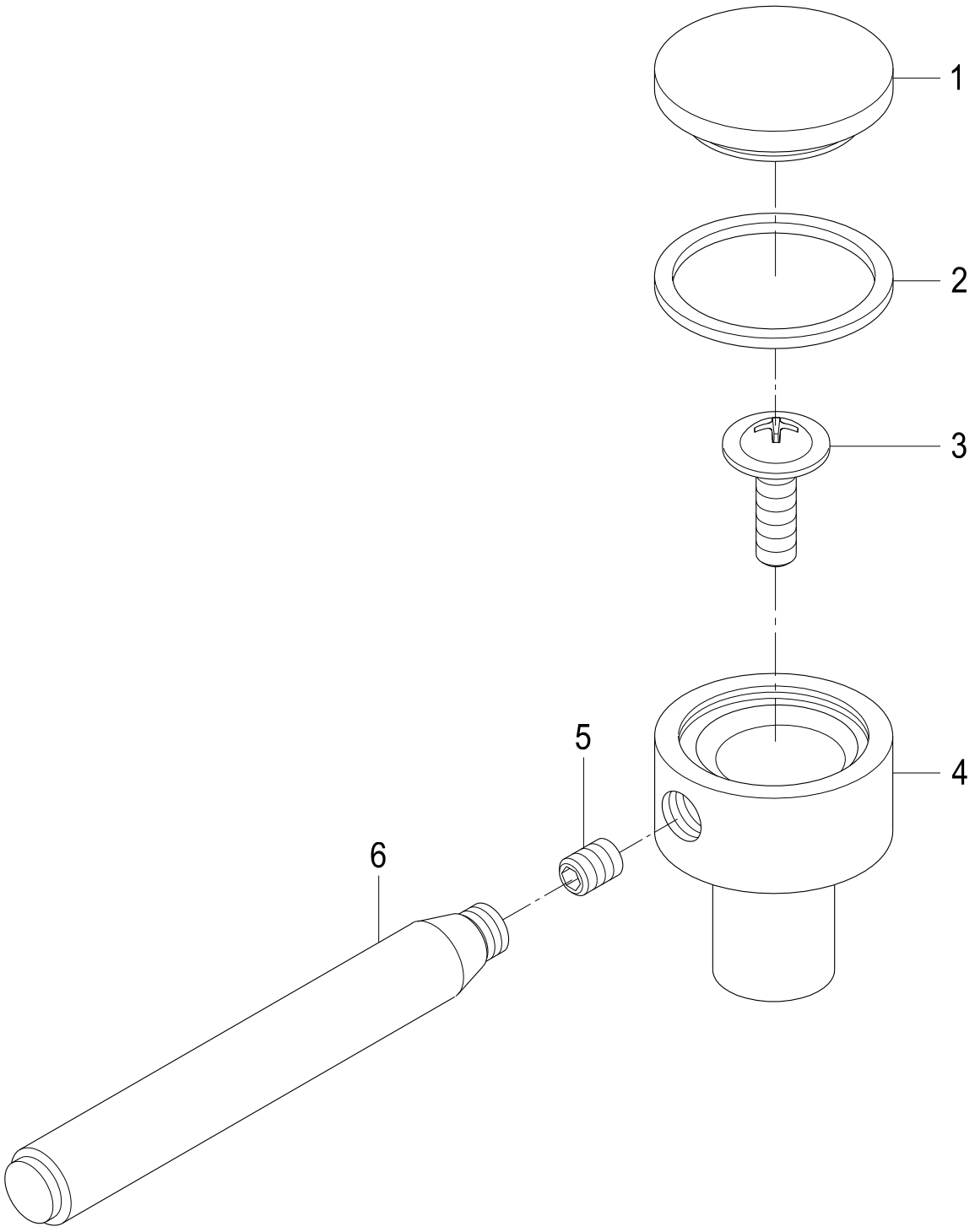
Lever Handle, Hot