# KSH9600,1,2,3,5,6,7,8GL
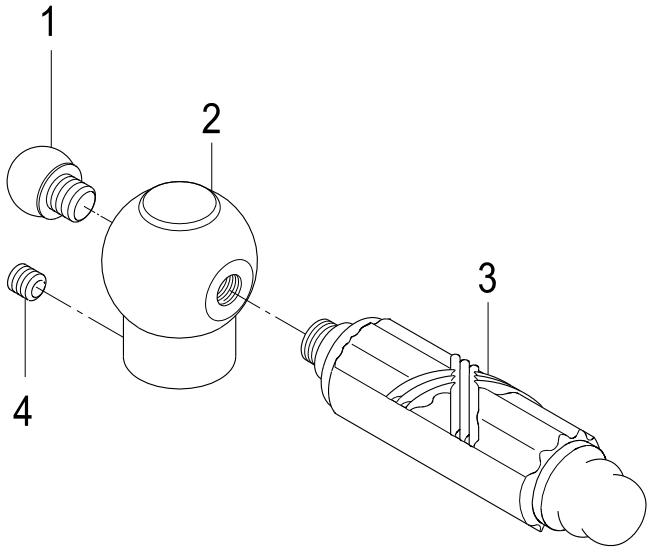
Lever Handle