KSHI313,MB,PB,AB,ORB,AC,PN,SB,SNC

Cold Handle Button
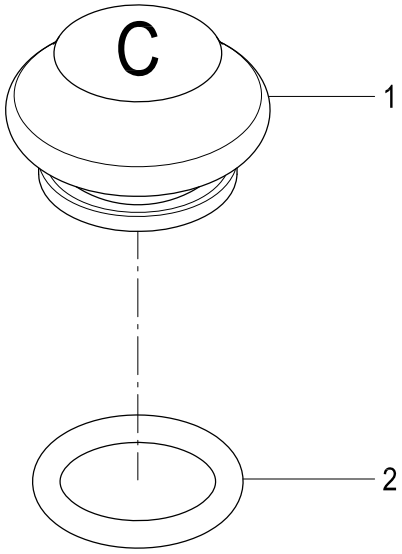
Part #	QTY
1.	1
2.	1