KSP214MB,C,PB,ORB,PN,SB,SN,SNPB
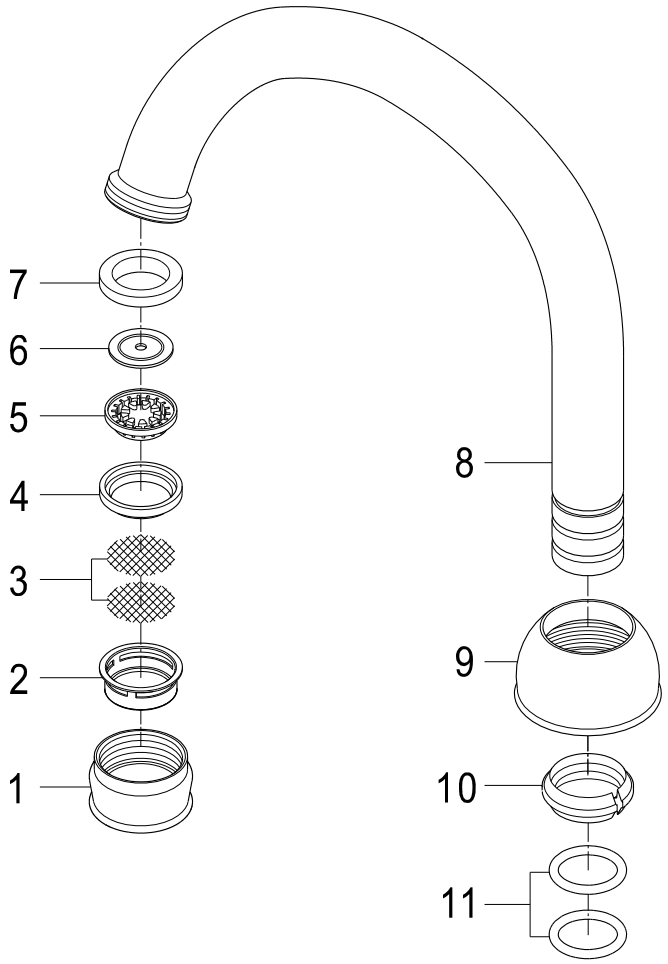
Spout