KSP413MB,C,PB,ORB,PN,SB,SN
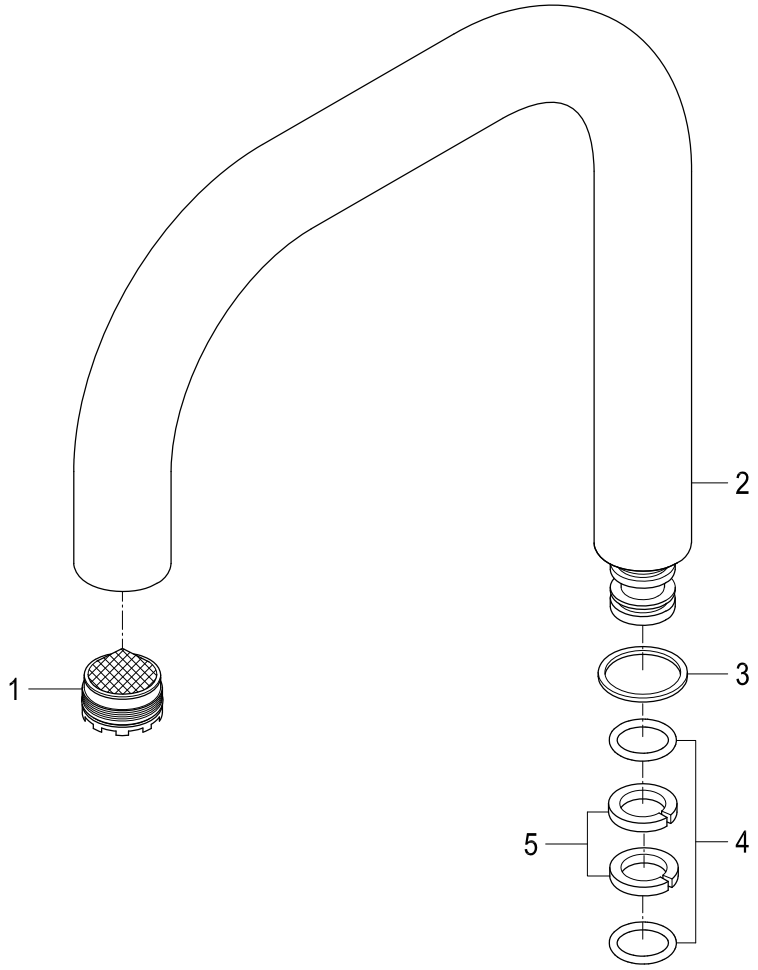
Spout