KTCL1,2,5,8
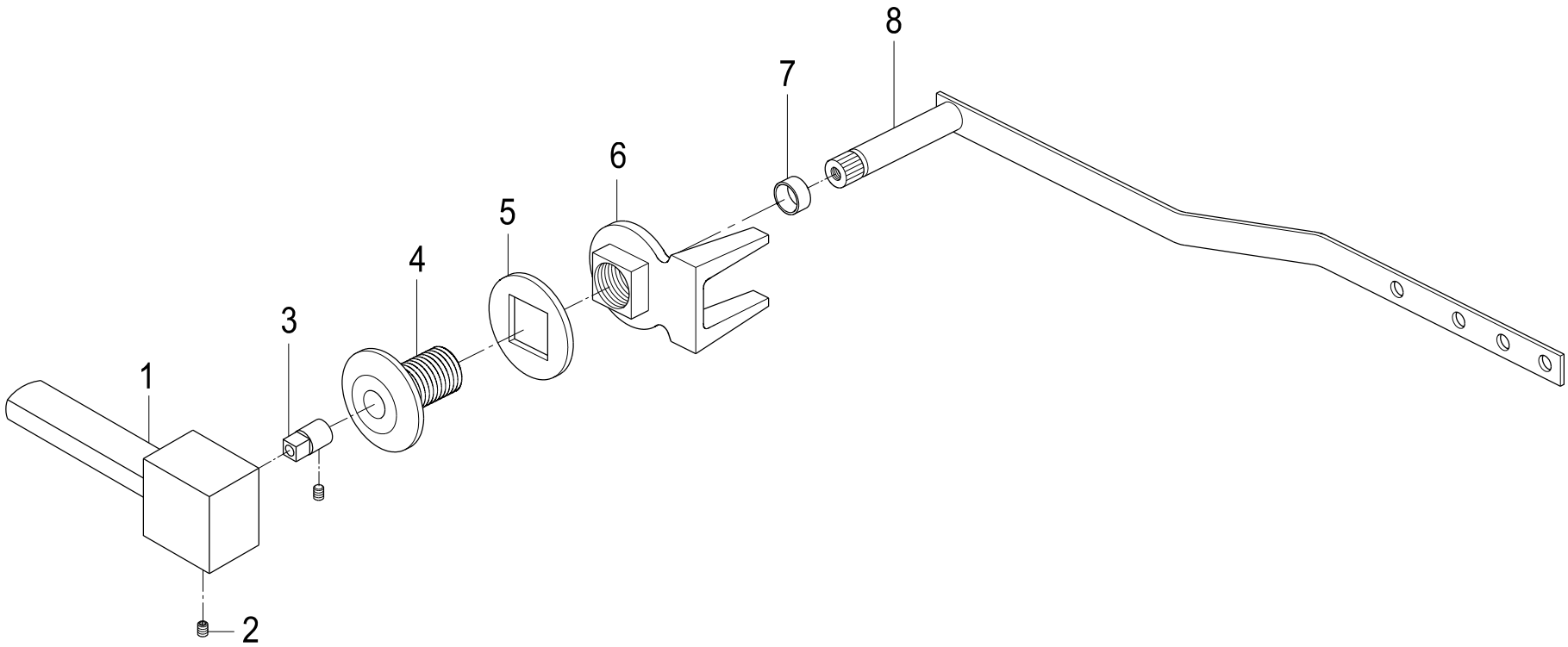
Tank Lever