VWP2522B0,1,2,5,6,7,8
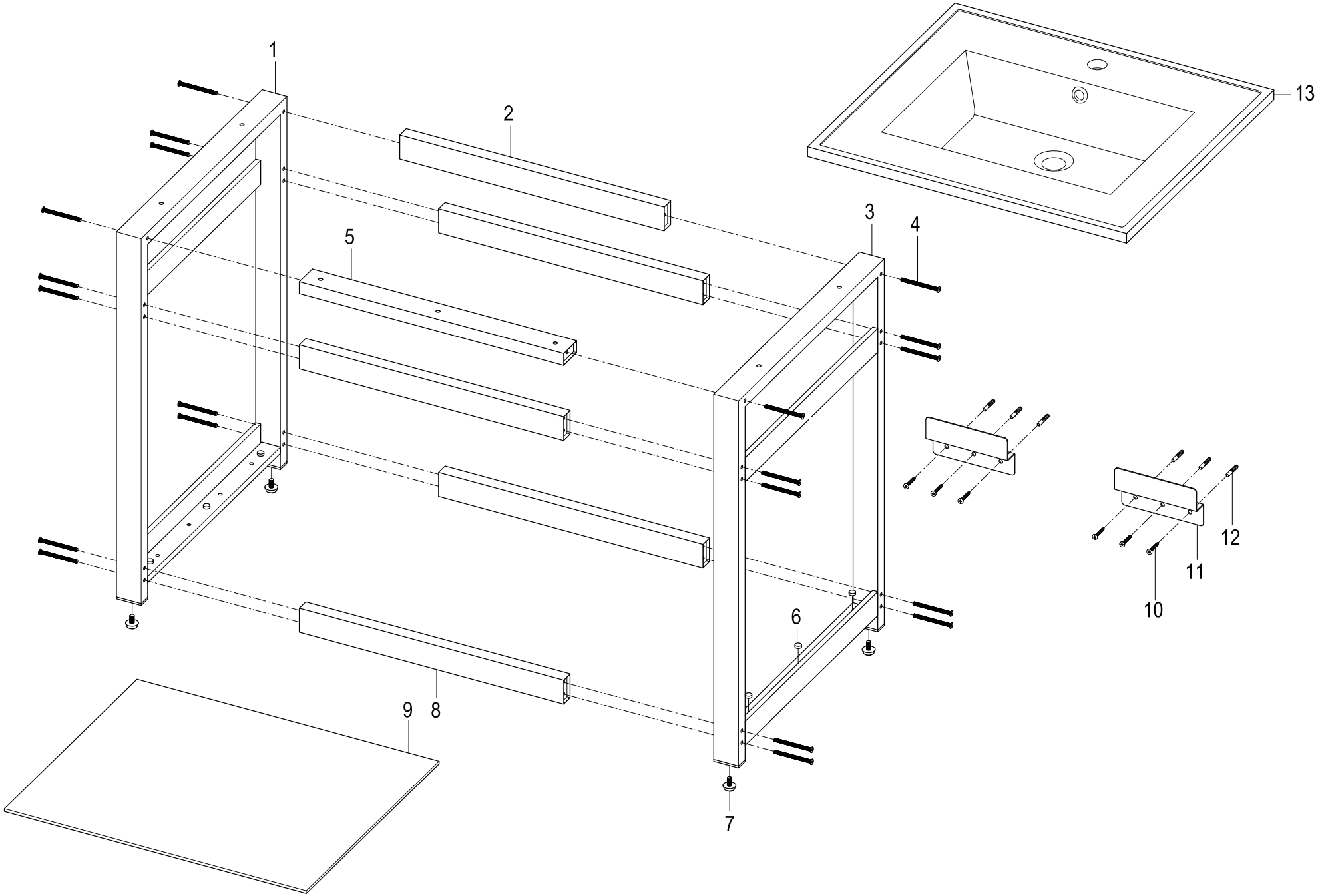
25" X 22" Ceramic Sink With Steel Bathroom Console & Glass Shelf