AE104T1WLL,AE103T0,2,5,7,8WLL
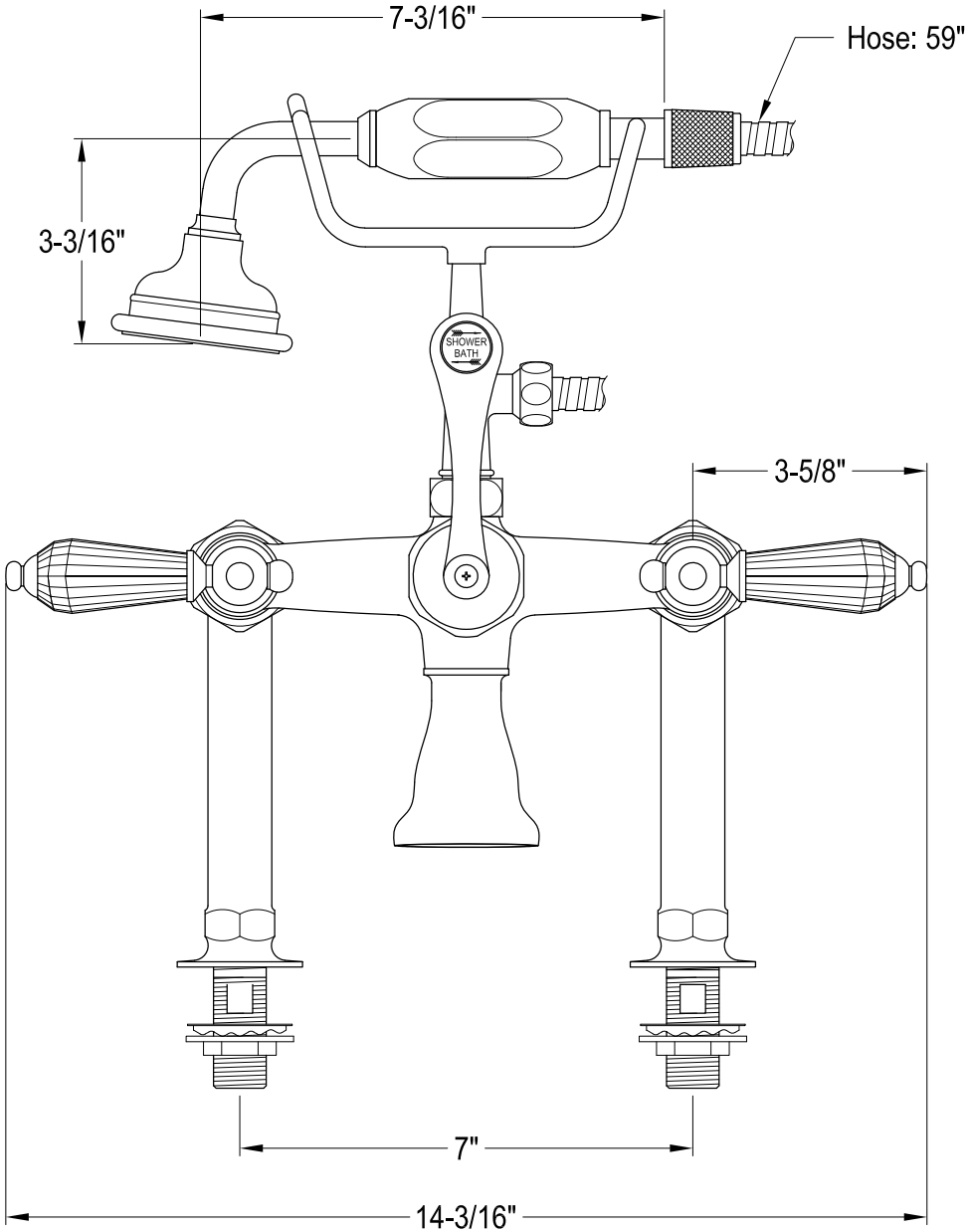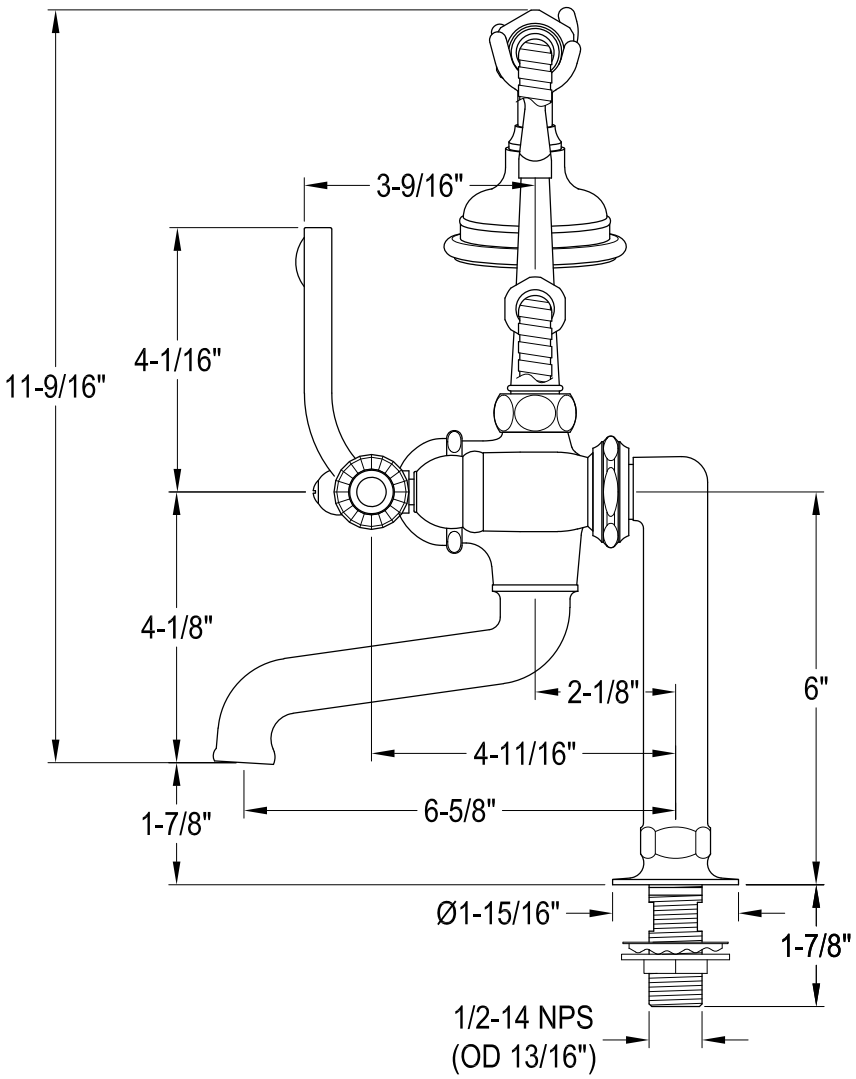
Deck Mount Tub Filler with Hand Shower