BSFK2420,1,7,8
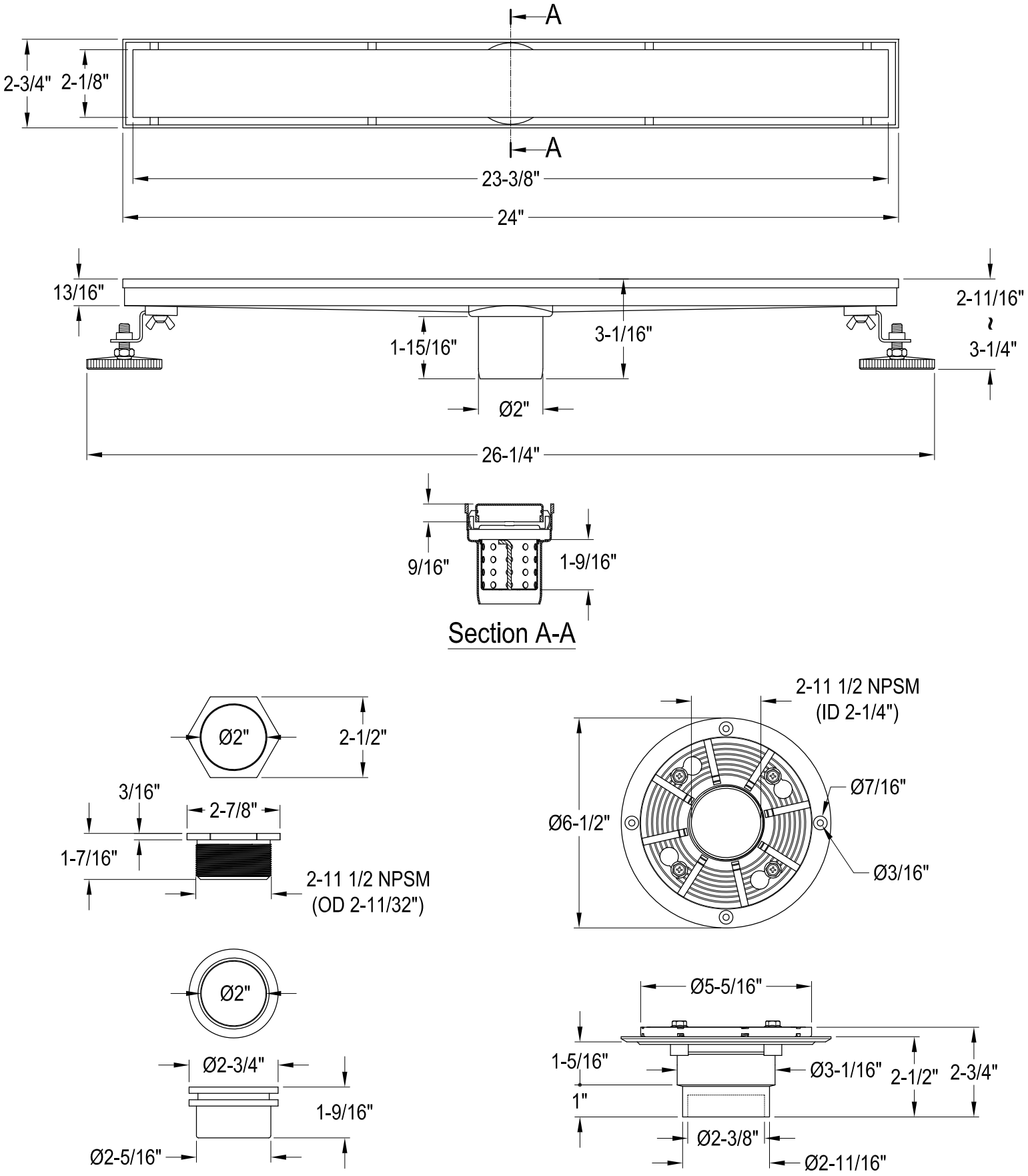
Shower Drain and Flange Kit