CC28L1,CC27L2,5,8

Mini Widespread Lavatory Faucet With Brass Pop-Up

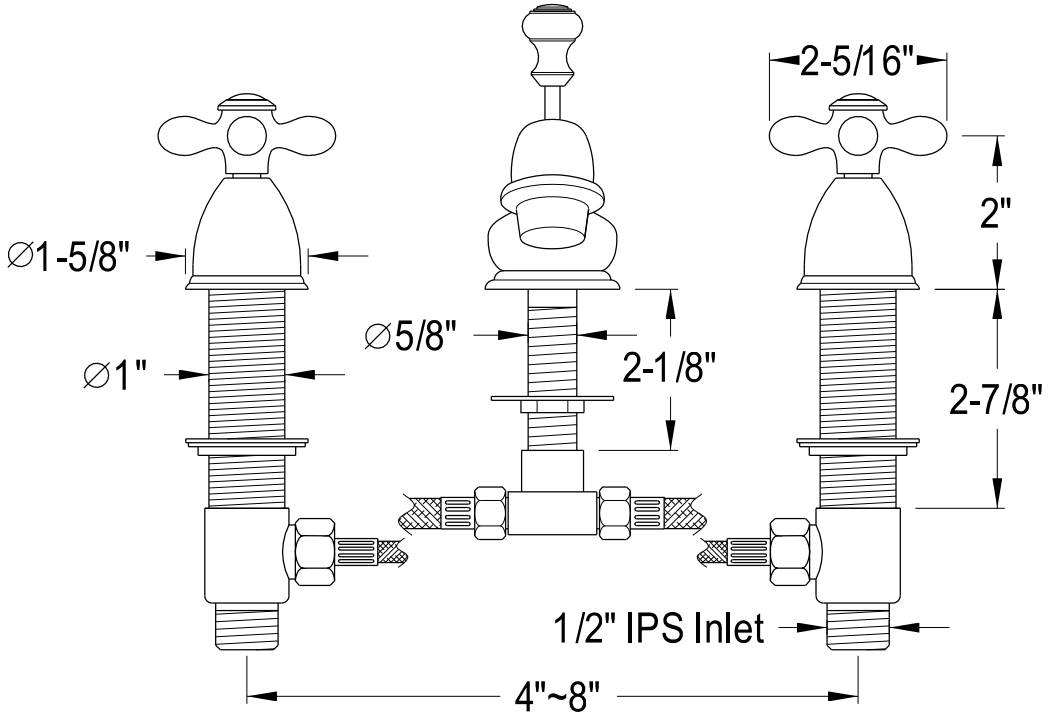

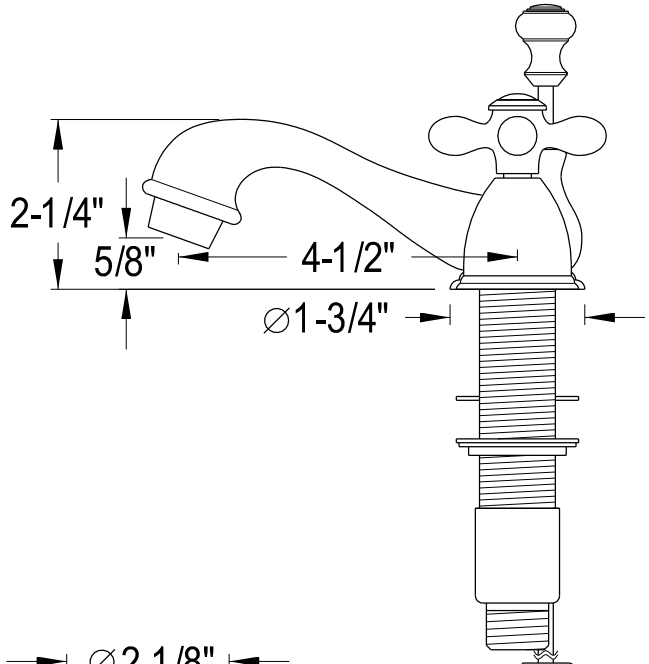

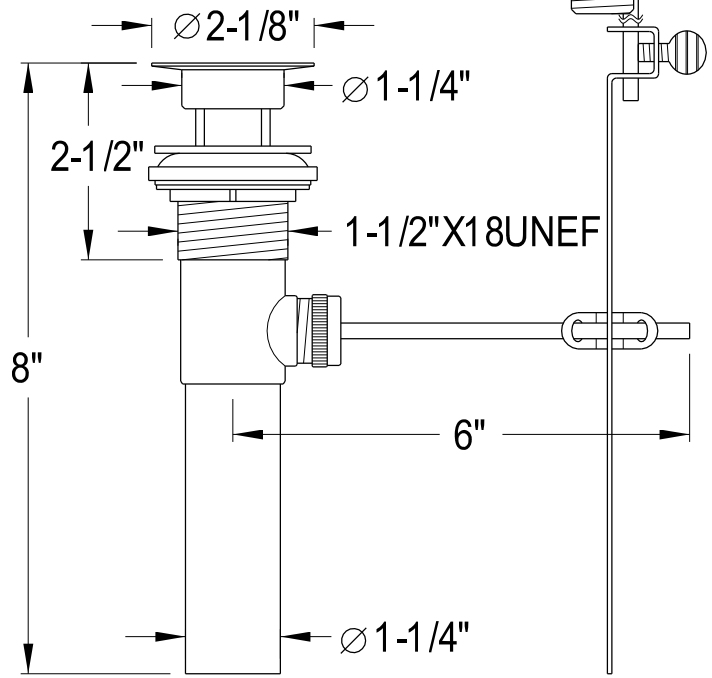

Ref# CC28L1,CC27L2,5,8 | 2014-01-B