CC33101,2,8K
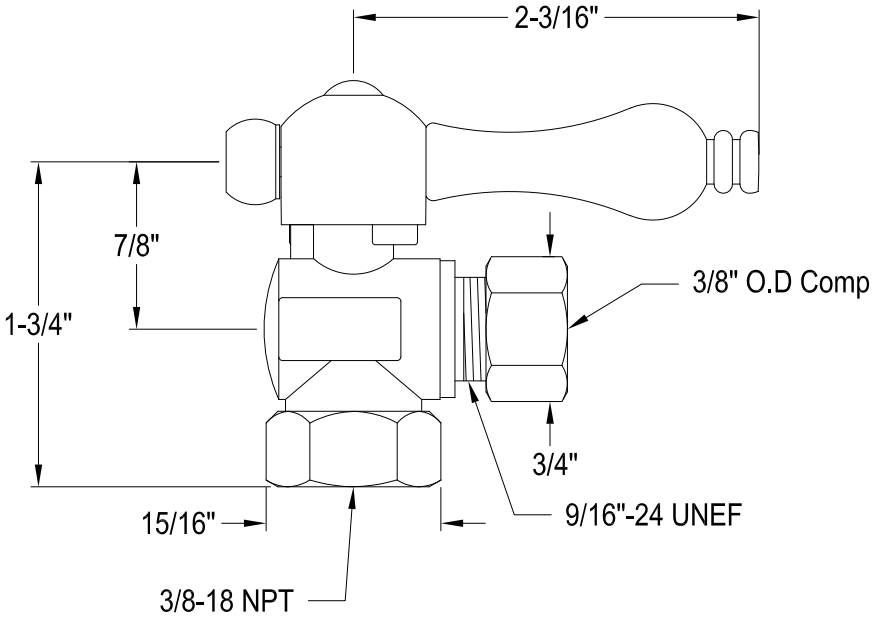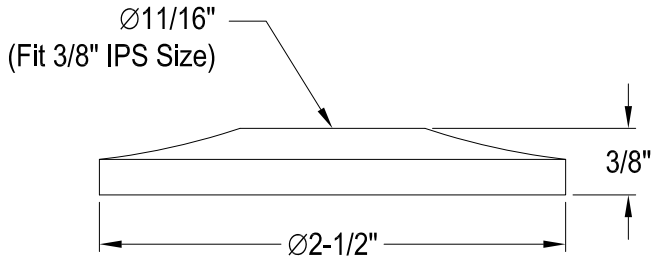
Quarter Turn Valves, 3/8" FIP x 3/8" O.D Comp With Flange